Reliable®

Model DDX
Single Interlock Preaction Systems
2" (50 mm), 2½" (65 mm), 3" (80 mm), 76 mm, 4" (100 mm), 6" (150 mm), 165 mm & 8" (200 mm)

Bulletin 749 Rev. C

Instructions for Installation, Operation, Care, and Maintenance

Wet Pilot Line,
Dry Pilot Line, and
Electric Actuation Trims

- Electric Release Trim Available with 175 psi (12.1 bar) or 300 psi (20.7 bar) Rated Solenoid Valve
- Electric Release Trim and Wet Pilot Trim Utilize 7 to 10 psi (0.5 to 0.7 bar) Pneumatic Supervising Pressure
- Dry Pilot Trim Utilize 8 psi to 28 psi (0.6 to 1.9 bar) Pneumatic Supervising Pressure
- Externally Resettable Clapper
- One Main Drain

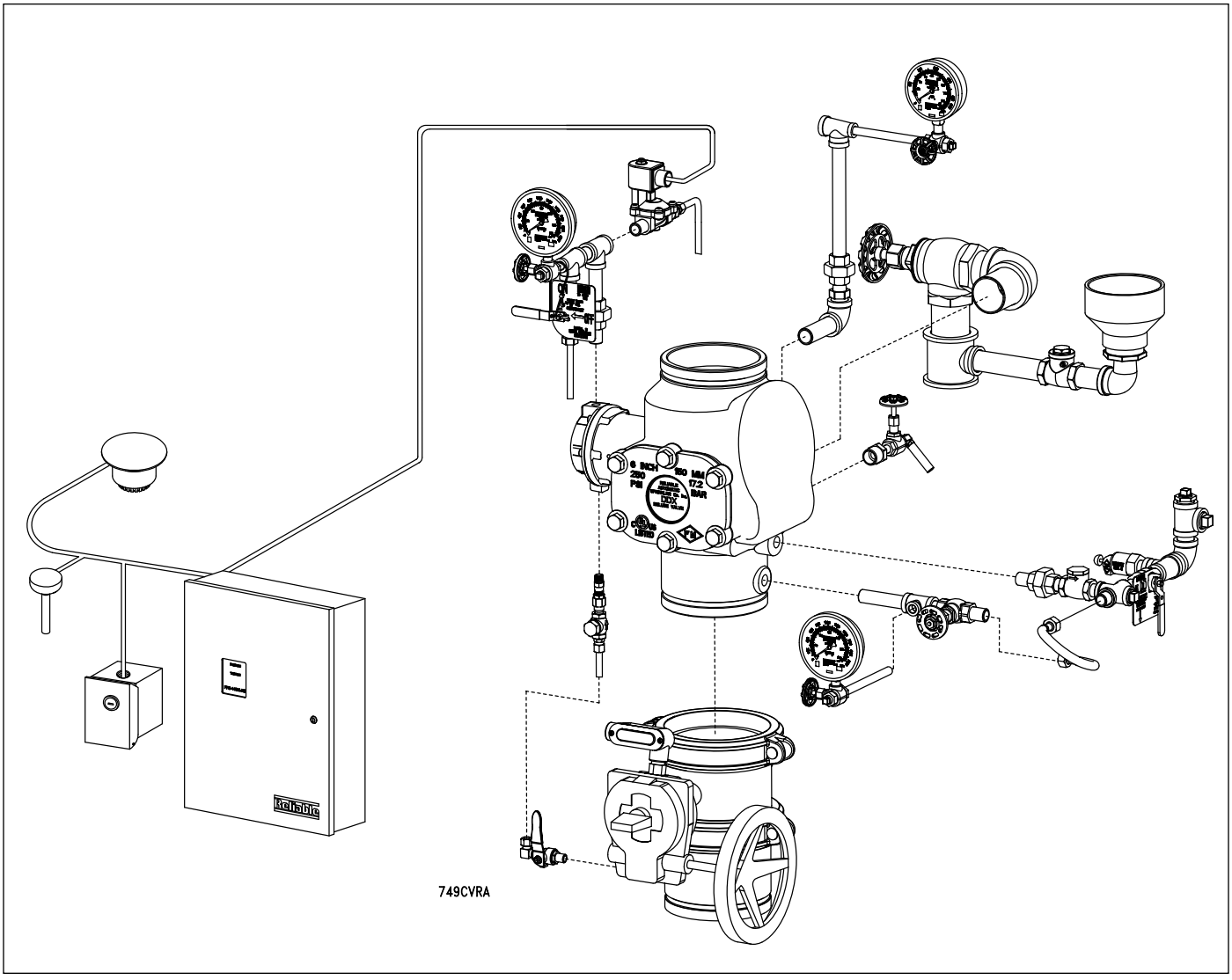

Reliable Automatic Sprinkler Co., Inc., 103 Fairview Park Drive, Elmsford, New York 10523

General

Single Interlock Preaction Systems are designed for water sensitive areas that require protection from inadvertent water flow into the sprinkler system piping.

At the heart of Reliable's Single Interlock Preaction Systems is the Model DDX Deluge Valve. This deluge valve is a hydraulically operated, straight-through-design, differential latching clapper-type (see Fig. 1). System maintenance is simplified since the deluge valve can be reset externally without removing its cover plate. This feature provides a significant system-restoration time advantage. The Model DDX Deluge Valve has an intermediate chamber and thereby does not require an in-line air check valve. Also, for ease of installation, the deluge valve only requires a single drain connection.

The trim sets for the single interlock preaction systems (see Figs. 3, 4, 5, 6, 7 and 8) provide all of the necessary equipment for connections to the Model DDX Deluge Valve's pushrod chamber inlet and outlet ports, a 1¼" (30 mm) main drain on 2" (50 mm), 2½" (65 mm), 76 mm and 3" (80 mm) valve sizes or a 2" (50 mm) main drain on 4" (100 mm), 165 mm, 6" (150 mm) and 8" (200 mm) valve sizes, alarm devices, air supply, and required pressure gauges. The trim sets are available in individual (loose) parts, in time-saving, segmented assembled kit forms or fully assembled to the Model DDX Deluge Valve (with or without a control valve). The major benefits of a single interlock preaction system, when compared with a wet pipe or deluge system are as follows:

- A fire alarm sounds prior to the operation of a sprinkler head, which may enable extinguishing the fire by hand-held means before the actual operation of any sprinklers and subsequent water damage.
- A trouble annunciator signals whenever the integrity of the piping or sprinklers is accidentally or intentionally disturbed; however, no water flow or water damage will occur at that time.
- Speedy detection and an early fire alarm are provided by fire detectors, without the delay associated with water delivery time in the event of a fire. Note that with a wet pipe system, the fire alarm is delayed until after water has begun flowing from an operated sprinkler head.

Sprinkler piping in Wet Pilot and Electric Actuation Single Interlock Preaction Systems can effectively be supervised by means of a Reliable Model B-SI Air Compressor Panel or Model C-SI Air Compressor Panel. Loss of 7 psi (0.5 bar) supervising pneumatic pressure, due to a damaged sprinkler or sprinkler pipe will not cause water to flow through the Model DDX Deluge Valve and into the system piping. A significant loss of pneumatic pressure will activate a trouble-annunciating device when the system pressure falls below approximately 4 psi (0.3 bar). **Note:** Wherever the word "air" is used in this bulletin as a reference to the pneumatic pressure source it shall also mean "air or nitrogen."

Wet Pilot Line Single Interlock Preaction Systems use a pilot line consisting of a line of closed sprinklers or pilot line detectors (Reliable's Model F1-FTR), which are located in the area to be protected. These sprinklers/detectors are more sensitive (lower activation temperature) than the sprinkler heads installed in the fire sprinkler system. The wet pilot line is directly installed to the Model DDX Deluge Valve's pushrod chamber. Wet pilot line sprinklers are detection devices and do not provide any water to aid in the firefighting capability of the fire sprinkler system.

To fully operate a Wet Pilot Line Single Interlock Preaction System, the heat from a fire must fuse a wet pilot line sprinkler/detector thereby releasing the water pressure from the Deluge Valve's pushrod chamber. As this water pressure is lost in this chamber, the main water supply will open the Deluge Valve's clapper, thereby flowing water into the fire sprinkler piping. Water flowing into the system will flow through the intermediate chamber of the deluge valve to a mechanical sprinkler alarm (optional) and/or will simultaneously produce water pressure that causes the transfer of contacts in the (optional) alarm pressure switch mounted in the trim. If provided, the alarm pressure switch can electrically initiate the shut-down or start up of equipment, such as computer, HVAC, or other secondary alarm devices (Note: the wiring contacts for the alarm pressure switch are the "Common" and "A" contacts). The flow of water into the sprinkler system piping converts the dry system into a wet system. In the event that the fire subsequently produces enough heat to operate a fire sprinkler head, water will flow from that sprinkler, controlling or suppressing the fire.

The fire sprinkler system piping may be required to be supervised (see NFPA 13) with air pressure. Loss of this supervisory air due to a damaged sprinkler or the sprinkler piping will not cause the Model DDX Deluge Valve to open. The supervisory air supply for the fire sprinkler piping may effectively be supervised by Reliable's Model B-SI Air Compressor Panel or Reliable's Model C-SI Air Compressor Panel. Other options include the use of the Reliable NS-PaK or Nitrogen Regulator with an approved nitrogen source, the Reliable Model A-2 Pressure Maintenance Device with a tank-mounted air compressor, or a tank-less air compressor controlled by a pressure switch or the Reliable Model B-1 Air Maintenance Device. (See Reliable Bulletin 254).

In **Electric Actuation Single Interlock Preaction Systems**, when one electrical detector senses the presence of fire, the electrical releasing control panel activates fire alarm devices and operates the normally-closed solenoid valve (175 psi (12.1 bar) or 300 psi (20.7 bar) Rated) to the open position (**Note:** Arranging detectors in a cross-zoned pattern will require operation of two detectors before the solenoid valve can open). The solenoid valve, when closed, retains sufficient water pressure in the pushrod chamber of the Model DDX Deluge Valve to maintain it closed. Energizing the solenoid valve relieves the water pressure, thus opening the Deluge Valve and allowing water to flow into the sprinkler system.

To fully operate a cross-zoned single interlock system, two electrical detectors must activate and a sprinkler head must open. During the early stages of a fire, smoke or heat activates the first detector, which causes the control panel to produce a local alarm and an alarm at the main fire alarm panel. Electrical relays inside the releasing control panel can be used to shut down air moving equipment or activate security doors and other electrical devices when the panel goes into the first alarm condition. Subsequent activation of

a second, nearby or adjacent, detector will cause the panel to energize the solenoid valve open and release water into the sprinkler system piping. Water flowing into the sprinkler system piping will simultaneously produce water pressure that causes the transfer of contacts in the pressure switch mounted in the Reliable Single Interlock Preaction System's riser assembly. This pressure switch can electrically initiate the shut down or startup of equipment, such as computers or other second alarm devices. The flow of water into the sprinkler system piping effectively converts the dry system into a wet pipe system. In the event that the fire subsequently produces sufficient heat to operate a sprinkler head, water will flow from that sprinkler, controlling or suppressing the fire.

Dry Pilot Single Interlock Preaction Systems are used in areas that may be subjected to freezing conditions. They can also be utilized to obtain installed sprinkler heights and pipe lengths greater than the allowed for wet pilot systems. A dry pilot line installation consists of an air-pressurized line of closed sprinklers or pilot line detectors (Reliable's Model F1-FTR), which are located in the area to be protected. NFPA 72 or the Authority Having Jurisdiction (AHJ) should be consulted for spacing and elevation requirements for the installation of dry pilot sprinklers/detectors.

In the system's trim, the dry pilot line is connected to a Model LP Dry Pilot Line Actuator. This actuator functions very much like a miniature dry pipe valve. It requires only 8 to 28 psi (0.6 to 1.9 bar) of air pressure (depending on the water supply pressure) to maintain the Model DDX Deluge Valve in a closed position. In areas where moisture-laden air could cause a freezing condition, or other problems in the dry pilot line, the use of a dry, compressed gas such as nitrogen is suggested. Approved gas handling regulators (see Reliable Bulletin 254) and connections are recommended. When one of the dry pilot line sprinklers/ detectors actuates, the air pressure in the line is reduced, thus opening the Model LP Dry Pilot Line Actuator, which in turn releases the DDX Deluge Valve and fills the fire sprinkler piping with water. However, water does not flow from the fire sprinkler system until one of its sprinklers fuses from the heat of the fire.

The fire sprinkler system piping may be required to be supervised (see NFPA 13) with air pressure. Loss of this supervisory air due to a damaged sprinkler or the sprinkler piping will not cause the Model DDX Deluge Valve to open. This is accomplished by the ½" check valve which is located in the valve's trim. The check valve prevents air pressure (from the dry pilot line) from escaping out of the Model LP Dry Pilot Line Actuator. A low air pressure switch (Potter PS25-2) is also provided in the trim. The contacts of this switch will close on the loss of air in the sprinkler piping, thereby providing a low air alarm to aid in insuring the integrity of the sprinkler system piping. The pressure switch's low air alarm should be wired to a supervisory alarm bell or the building's alarm system (**Note:** The wiring for closing of contacts on the loss of pressure is made on the "COM" and "2" terminals of switch.)

Damage to a dry pilot line sprinkler/detector or the dry pilot line piping that causes a significant loss of pressure will cause the Model DDX Deluge Valve to open, flowing water into the fire sprinkler system piping. The supervisory air supply for both the dry pilot line and the fire sprinkler piping can effectively be maintained by means of pressure-switch-operated, tank-mounted air compressor and a Reliable Model A-2 Pressure Maintenance Device (see Reliable Bulletins 254). The compressor's tank provides a reserve supply of air, whereas the Model A-2 Pressure Maintenance Device consistently regulates the air pressure of both the dry pilot line and the fire sprinkler piping.

The dry pilot line sprinklers/detectors must be more sensitive to the heat from a fire than the sprinklers in the fire sprinkler system. The Model F1-FTR (Fixed Temperature Release) is specifically designed for use in dry pilot line operated sprinkler systems. Dry pilot line sprinklers are detection devices and do not provide any water to aid in the firefighting capability of the fire sprinkler system.

To fully operate a dry pilot line preaction system, the heat from a fire must fuse a dry pilot line sprinkler/detector thereby releasing the air pressure from the Model LP Dry Pilot Line Actuator. The water pressure is then able to overcome the pressure differential of the actuator, allowing water to flow from the Model DDX Deluge Valve's push rod chamber. As this water pressure is lost in the push rod chamber, the supply pressure will then force the valve's clapper open, flowing water into the fire sprinkler system piping. Water flowing into the system will flow through the intermediate chamber of the deluge valve to a mechanical sprinkler alarm (optional) and/ or will simultaneously produce water pressure that causes the transfer of contacts in the (optional) alarm pressure switch mounted in the trim. If provided, the alarm pressure switch can electrically initiate the shut-down or start up of equipment, such as computer, HVAC, or other secondary alarm devices (Note: the wiring contacts for the alarm pressure switch are the "Common" and "A" contacts). The flow of water into the sprinkler system piping converts the dry system into a wet system. In the event that the fire subsequently produces enough heat to operate a fire sprinkler head, water will flow from that sprinkler, controlling or suppressing the fire.

Listings & Approvals:

(Only when used with Reliable's Trim Sets.)

1. Reliable's 2" (50 mm), 2½" (65 mm), 76 mm, 3" (80 mm), 4" (100 mm), 165 mm, 6" (150 mm) and 8" (200 mm) Electric Actuation Single Interlock Preaction Systems, Wet Pilot Line Single Interlock Preaction Systems and Dry Pilot Line Single Interlock Preaction Systems are Underwriters Laboratories, Inc. Listed and UL certified for Canada (cULus) in the Special System Water Control Valve-Deluge Type (VLFT) category.
2. Reliable's 2" (50 mm), 2½" (65 mm), 76 mm, 3" (80 mm), 4" (100 mm), 165 mm, 6" (150 mm) and 8" (200 mm) Electric Actuation Single Interlock Preaction Systems are certified by Factory Mutual Approvals (FM). Factory Mutual does not approve the use of smoke detectors or cross zoned detectors in preaction systems.

DDX VALVE CLAPPER IN "OPEN", "CLOSED" AND "LATCHED" POSITIONS

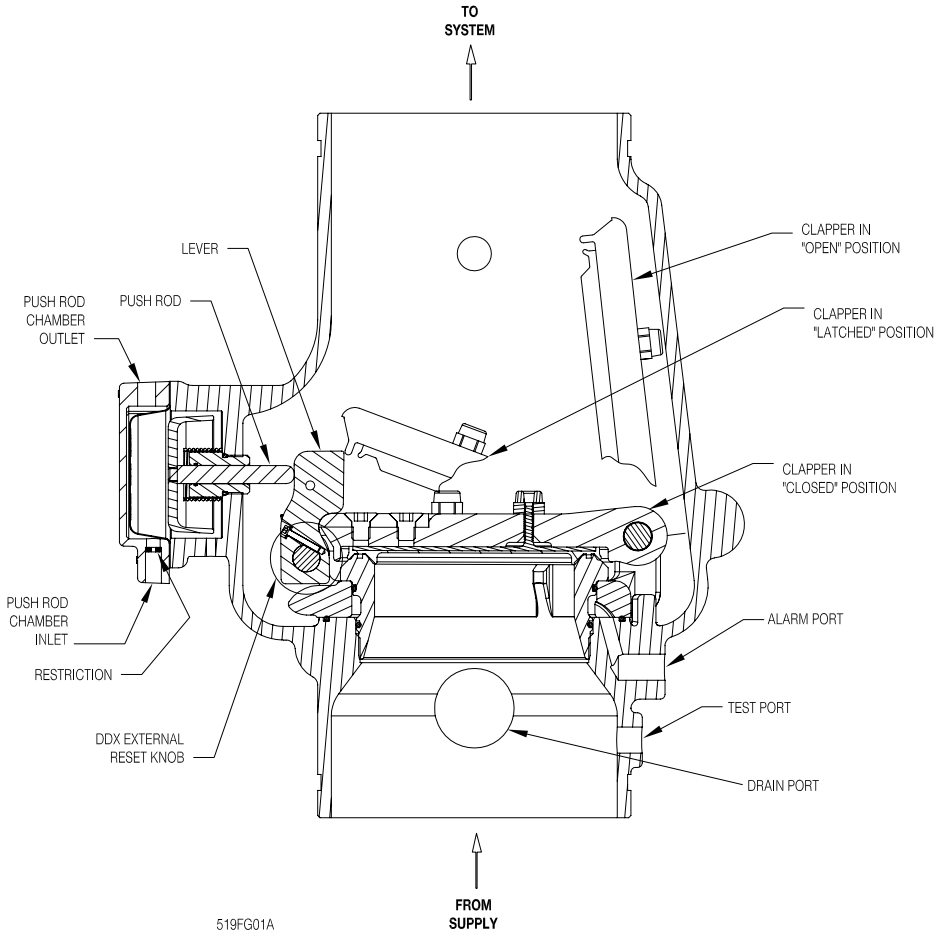

REAR VIEW OF MODEL DDX VALVE

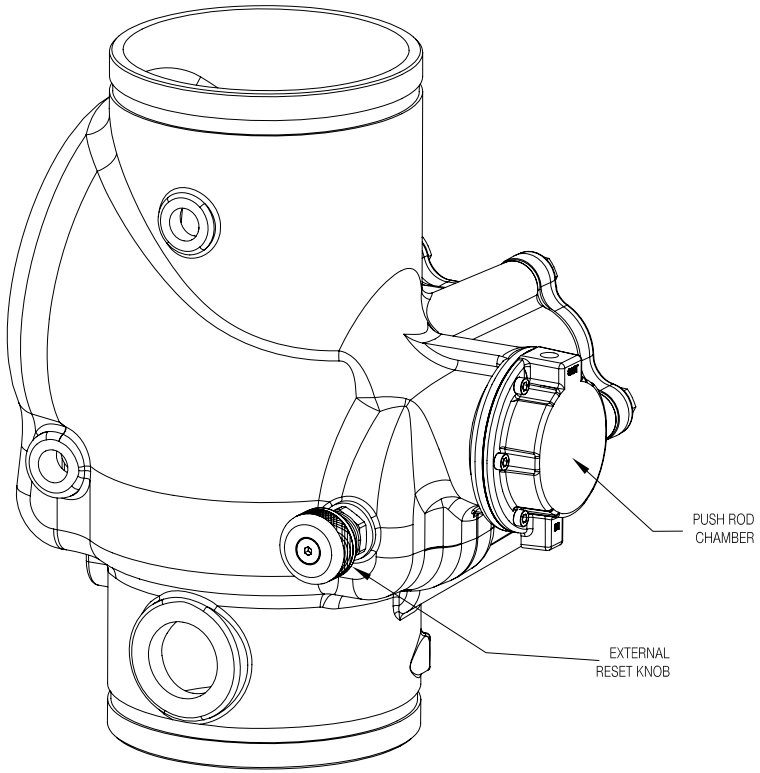

PUSH INWARD AND ROTATE KNOB CLOCKWISE TO RESET CLAPPER.
DO SO ONLY WHEN PUSH ROD CHAMBER IS VENTED.

Fig. 1

System Operation

When set correctly for service, the Model DDX Deluge Valve is hydraulically established to withhold the supply water from the sprinkler system piping. The Reliable Model DDX Deluge Valve is shown in both closed and open positions in Fig. 1. In the closed position, the supply pressure acts on the underside of the clapper and also on the push rod through the push rod chamber's inlet restriction. The resultant force due to the supply pressure acting on the push rod is multiplied by the mechanical advantage of the lever and is more than sufficient to hold the clapper closed against normal supply pressure surges.

To fully operate (deliver water) a Wet Pilot Line Single Interlock Preaction System, two independent events must coexist before water flow will occur. A wet pilot line sprinkler/detector must fuse along with a fire sprinkler head. Operation of either one of these heads will cause an alarm to annunciate, but will not cause water discharge from the fire sprinkler system piping.

When a fire is detected, the opened wet pilot line sprinkler/detector vents the push rod chamber to atmosphere through the chamber's outlet. Since the pressure cannot be replenished through the inlet restriction as rapidly as it is vented, the push rod chamber pressure falls instantaneously. When the push rod chamber pressure approaches approximately one-third of the supply pressure, the upward force of the supply pressure acting beneath the clapper overcomes the lever-applied force thereby opening the clapper.

To fully operate an Electric Actuation Single Interlock Preaction System, two independent events must coexist before water flow will occur. One electrical detector (two detectors in a cross-zoned system) must activate and a sprinkler head must open. Operation of either one of these items will only cause an alarm to annunciate, but will not cause water to discharge from the sprinkler system piping.

When a fire is detected, the energized solenoid valve vents the push rod chamber to atmosphere through the chamber's outlet. Since the pressure cannot be replenished through the inlet restriction as rapidly as it is vented, the pushrod chamber pressure falls instantaneously. When the pushrod chamber pressure approaches approximately one-third of the supply pressure, the upward force of the supply pressure acting beneath the clapper over comes the lever-applied force thereby opening the clapper.

To fully operate (deliver water) a Dry Pilot Line Single Interlock Preaction System, two independent events must coexist before water flow will occur. A dry pilot line sprinkler/detector must fuse along with a fire sprinkler head. Operation of either one of these heads will cause an alarm to annunciate, but will not cause water discharge from the fire sprinkler system piping.

When a fire is detected, the Model LP Dry Pilot Line Actuator vents the push rod chamber to atmosphere through the chamber's outlet. Since the pressure cannot be replenished through the inlet restriction as rapidly as it is vented, the push rod chamber pressure falls instantaneously.

When the push rod chamber pressure approaches approximately one-third of the supply pressure, the upward force of the supply pressure acting beneath the clapper overcomes the lever-applied force thereby opening the clapper.

In all Reliable Single Interlock Preaction Systems, once the clapper has opened, the lever acts as a latch, preventing the clapper from returning to the closed position. Water from the supply flows through the Deluge Valve into the system piping. Water also flows through the Deluge Valve alarm outlet to the alarm devices.

After system shutdown, resetting the Model DDX Deluge Valve is quite simple. Doing so only requires pushing in and turning the reset knob at the rear of the valve (see Fig 1). The external reset feature of the Model DDX Deluge Valve provides a means for simple, economical system testing, which is one essential facet of a good maintenance program. The external reset feature does not, however, eliminate another important facet of good maintenance, namely, periodic cleaning and inspection of the internal valve parts.

In the event that water builds up inside the valve due to condensate from the air supply system or water left inside from valve system testing, a drain is available for venting. After closing the main supply valve, a small valve over the drain cup can be opened slightly until the water inside the valve body and the main pipe column has drained. See the section titled "Draining Excess/Condensate Water From System" in this bulletin for the detailed procedure.

The Model B Manual Emergency Station (see Fig. 12) is also included in all Reliable Single Interlock Preaction System trim sets. It consists of an aluminum nameplate mechanically attached to a ball valve. The valve handle in its OFF position is guarded against accidental turning to the ON position (and system discharge) by a nylon cable tie provided with each trim kit. The cable tie is inserted, as shown in Fig. 12, after the system has been restored for operation. The nylon cable tie is designed to allow, in case of an emergency, forceful turning of the valve handle to the ON position. As an alternative to the Model B Hydraulic Manual Emergency Station, the Model A Hydraulic Manual Emergency Pull Box (see Reliable Bulletin 506) is also available and can be provided as an option.

Whenever ambient temperature conditions are high, the water temperature in the Model DDX Deluge Valve's pushrod chamber could possibly increase, thereby increasing the pressure in the chamber to values exceeding the rated pressure of the system. In an indoor installation where standard room temperatures are exceeded, a pressure relief kit may be needed. Pressure relief kit, P/N 6503050001, can be installed into the pushrod chamber's releasing line to limit the pressure to 250 psi (17.2 bar).

Reliable Model DDX Deluge Valve with associated Single Interlock Preaction Trims sizes 2" (50 mm), 2½" (65 mm), 76 mm, 3" (80 mm), 4" (100 mm), 165 mm, 6" (150 mm) and 8" (200 mm) are rated for use at a minimum water supply pressure of 20 psi (1.4 bar) and a maximum water supply pressure of 250 psi (17.2 bar) for 2" (50mm), 2½" (65mm), 76mm, 3" (80mm) and 8" (200mm) valve sizes and 300 psi (20.7 bar) for 4" (100mm), 165mm and 6" (150mm) valve sizes. Water supplied to the inlet of the valve and to the push rod chamber must be maintained between 40˚F (4˚C) and 140˚F (60˚C).

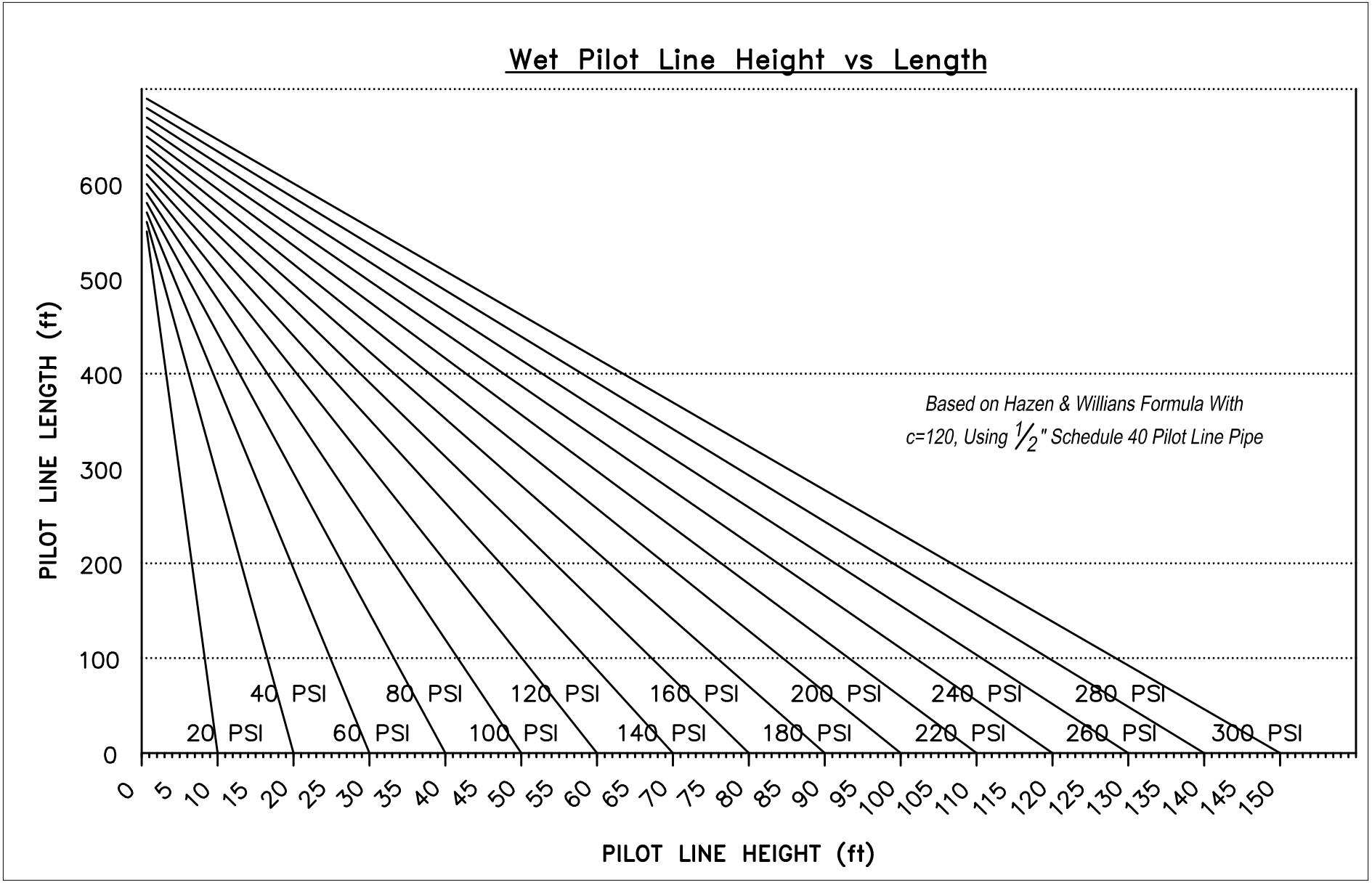
Wet Pilot Line Height vs Length
PILOT LINE LENGTH (ft)
0
100
200
300
400
500
600
Based on Hazen & Willians Formula With
c=120, Using 1/2" Schedule 40 Pilot Line Pipe
20 PSI
40 PSI
60 PSI
80 PSI
100 PSI
120 PSI
140 PSI
160 PSI
180 PSI
200 PSI
220 PSI
240 PSI
260 PSI
280 PSI
300 PSI
0 5 10 15 20 25 30 35 40 45 50 55 60 65 70 75 80 85 90 95 100 105 110 115 120 125 130 135 140 145 150
PILOT LINE HEIGHT (ft)

Fig. 2

WET PILOT LINE SINGLE INTERLOCK PREACTION TRIM

2"(50MM), 2-1/2"(65MM), 76MM, 3"(80MM)

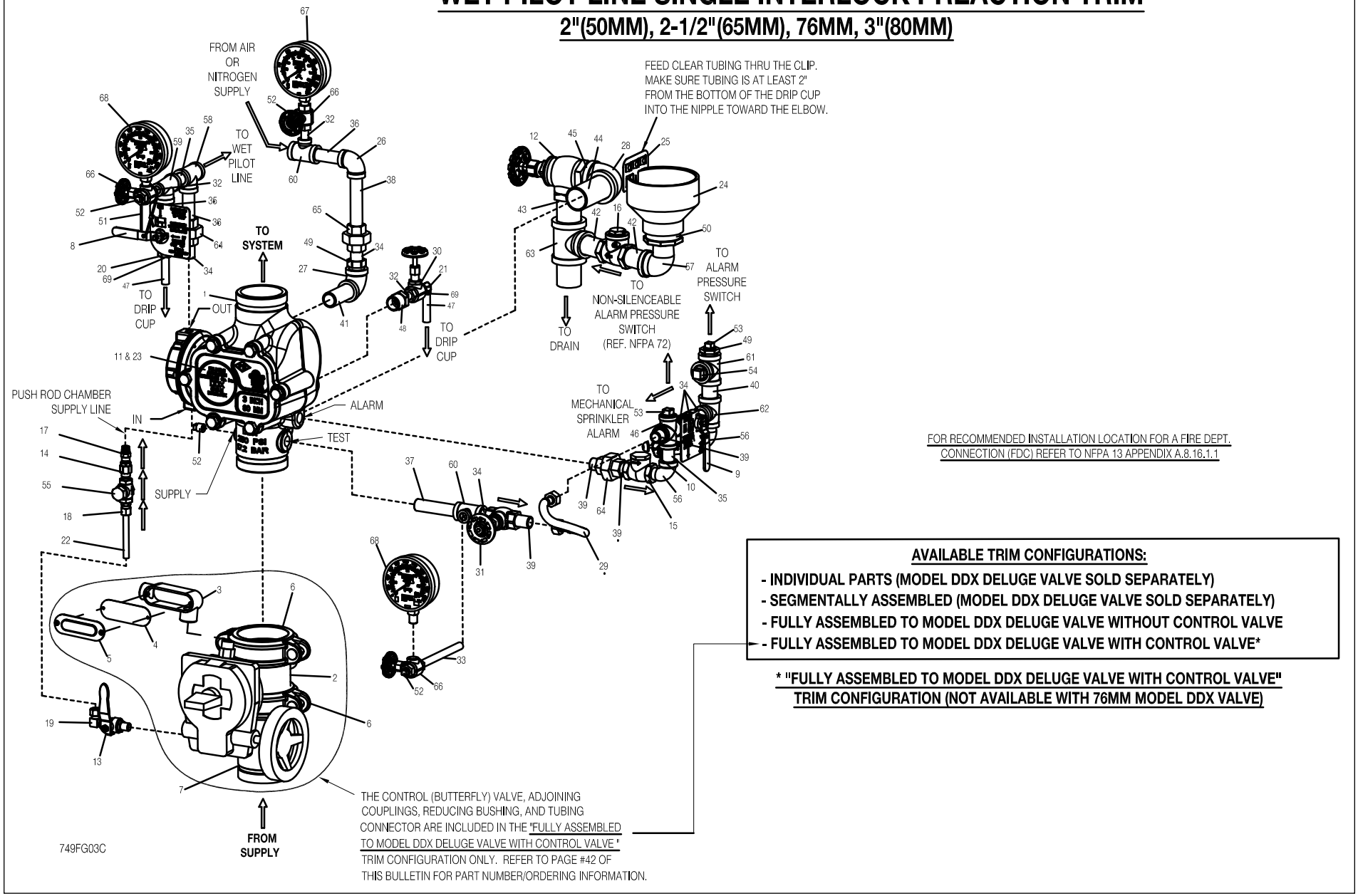

FOR RECOMMENDED INSTALLATION LOCATION FOR A FIRE DEPT. CONNECTION (FDC) REFER TO NFPA 13 APPENDIX A.8.16.1.1

AVAILABLE TRIM CONFIGURATIONS:

- **INDIVIDUAL PARTS (MODEL DDX DELUGE VALVE SOLD SEPARATELY)**
- **SEGMENTALLY ASSEMBLED (MODEL DDX DELUGE VALVE SOLD SEPARATELY)**
- **FULLY ASSEMBLED TO MODEL DDX DELUGE VALVE WITHOUT CONTROL VALVE**
- **FULLY ASSEMBLED TO MODEL DDX DELUGE VALVE WITH CONTROL VALVE***

*** "FULLY ASSEMBLED TO MODEL DDX DELUGE VALVE WITH CONTROL VALVE" TRIM CONFIGURATION (NOT AVAILABLE WITH 76MM MODEL DDX VALVE)**

THE CONTROL (BUTTERFLY) VALVE, ADJOINING COUPLINGS, REDUCING BUSHING, AND TUBING CONNECTOR ARE INCLUDED IN THE "FULLY ASSEMBLED TO MODEL DDX DELUGE VALVE WITH CONTROL VALVE" TRIM CONFIGURATION ONLY. REFER TO PAGE #42 OF THIS BULLETIN FOR PART NUMBER/ORDERING INFORMATION.

Fig. 3

Small DDX Wet Pilot Line SI Trim (Refer to Fig. 3)

Item No.	Part No.			Description	QTY.
	Galvanized	Brass	Black Pipe		
1	6103022000	6103022000	6103022000	Valve Assembly, 2" (50mm) - For 2" Assembly Only	1
	6103022500	6103022500	6103022500	Valve Assembly, 2½" (65mm) - For 2½" Assembly Only"	
	6103027600	6103027600	6103027600	Valve Assembly, 76mm - For 76mm Assembly Only	
	6103030000	6103030000	6103030000	Valve Assembly, 3" (80mm) - For 3" Assembly Only	
2	6990003549	6990003549	6990003549	Butterfly Valve, 2" - For 2" Assembly Only"	1
	7M99002653	7M99002653	7M99002653	Butterfly Valve, 2½" - For 2½" Assembly Only	
	7M99002654	7M99002654	7M99002654	Butterfly Valve, 3" - For 3" Assembly Only	
3	98020036	98020036	98020036	Conduit Body, 1/2"	1
4	98020034	98020034	98020034	Conduit Cover Gasket	1
5	98020033	98020033	98020033	Conduit Body Cover	1
6	7G05080800	7G05080800	7G05080800	Rigid Coupling, 2" - For 2" Assembly Only	2
	7G05101000	7G05101000	7G05101000	Rigid Coupling, 2½" - For 2½" Assembly Only"	
	7G05121200	7G05121200	7G05121200	Rigid Coupling, 3" - For 3" Assembly Only	
7	91004002	91004002	91004002	Inlet Spool, 2" - For 2" Assembly Only	1
	91004001	91004001	91004001	Inlet Spool, 2½" - For 2½" Assembly Only	
	91004003	91004003	91004003	Inlet Spool, 3" - For 3" Assembly Only	
8	78653000	78653000	78653000	Manual Emergency Station Assembly	1
9	78653004	78653004	78653004	Valve Caution Station Assembly	1
10	78653100	78653100	78653100	Ball Drip Valve, ½"	1
11	99080002	99080002	99080002	Adhesive Pad	1
12	98840106	98840106	98840106	Angle Valve, 1¼"	1
13	98840117	98840117	98840117	Ball Valve, ¼" NPTF x ¼" NPTM	1
14	98840188	98840188	98840188	Check Valve, ¼" NPTM x ¼" NPTF	1
15	98840181	98840181	98840181	Check Valve, Horizontal Swing, ½" NPT	1
16	98840145	98840145	98840145	Check Valve, Horizontal Swing, 1" NPT	1
17	98840147	98840147	98840147	Check Valve, Inline Poppet, ¼"	1
18	92056702	92056702	92056702	Compression Connector, 3/8" ID Tube x ¼" NPT	1
19	92056703	92056703	92056703	Compression Connector, Elbow 3/8" ID Tube x ¼" NPT	1
20	92056810	92056810	92056810	Connector, 3/8" ID Tube x ½" NPT	1
21	92056705	92056705	92056705	Connector, Elbow, 3/8" ID Tube x ¼" NPT	1
22	96686722	96686722	96686722	Copper Tubing, 3/8" OD x 2 ft.	1
23	94616917	94616917	94616917	Single Interlock Nameplate	1
24	98050004	98050004	98050004	Drain Cup, PVC	1
25	95306270	95306270	95306270	Drain Hose Clip	1
26	98174401	98174440	98164401	Elbow, ½"	1
27	98174402	98174441	98164400	Elbow, ¾"	1
28	98174414	98174443	98164407	Elbow, 1¼"	1
29	96920912	96920912	96920912	Flex Line, ½"	1
30	98840172	98840172	98840172	Globe Valve, ¼"	1
31	98840171	98840171	98840171	Globe Valve, ½"	1
32	98543226	98533226	98523213	Nipple ¼" x 1½"	3
33	98543217	98533217	98523217	Nipple ¼" x 6"	1
34	98543223	98533223	98523210	Nipple ½" x 1½"	6
35	98543209	98533209	98523209	Nipple ½" x 2"	3
36	98543230	98533230	98523230	Nipple ½" x 3"	2
37	98543207	988533207	98523207	Nipple ½" x 4"	1
38	98543228	98533228	98523234	Nipple ½" x 4½"	1
39	98543212	98533212	98523221	Nipple ½" x Close	4
40	98543232	98533232	98523242	Nipple ¾" x 2"	1
41	98543231	98533231	98523240	Nipple ¾" x 3"	1
42	98543263	98533263	98523261	Nipple 1" x 3"	2
43	98543239	98533239	98523256	Nipple 1¼" x 3"	1
44	98543250	98533264	98523264	Nipple 1¼" x 4"	1
45	98543285	98533285	98523274	Nipple 1¼" x Close	1
46	98750003	98750033	98750013	Pipe Cross, ½"	1
47	96686756	96686756	96686756	PVC Tubing, 3/8" ID x 6 ft.	1
48	98048025	98058025	98048011	Reducer Bushing, ¾" x ¼"	1
49	98048022	98058022	98048012	Reducer Bushing, ¾" x ½"	2
50	98048015	98048015	98048015	Reducer Bushing, 2" Spigot x 1" NPTF, PVC	1
51	89141112	89141112	89141112	Retaining Tie	9
52	98614403	98614412	98604403	Square Head Plug, ¼"	4
53	98604406	98614411	98604402	Square Head Plug, ½"	2
54	98614401	98614413	98604401	Square Head Plug, ¾"	1
55	98727607	98727607	98727607	Strainer, ¼"	1
56	98174400	98174446	98164409	Street Elbow, ½"	2
57	98174416	98174449	98174412	Street Elbow, 1"	1
58	98761651	96606915	98761603	Tee, ½"	1
59	98761649	96606916	98761604	Tee, ½" x ¼" x ½"	1
60	96606607	96606912	98761605	Tee, ½" x ½" x ¼"	2
61	96606601	96606911	98766521	Tee, ¾"	1
62	96606612	96606913	98761614	Tee, ¾" x ½" x ½"	1
63	96606603	96606917	98761621	Tee, 1¼" x 1¼" x 1"	1
64	98815200	*98815300	98805200	Union, ½"	2
65	98815204	N/A	98845204	Union, ½", O-ring Seal	1
66	98840160	98840160	98840160	Valve, 3-way, ¼"	3
67	98248000	98248000	98248000	Air Pressure Gauge (0-80 psi)	1
68	98248001	98248001	98248001	Water Pressure Gauge (0-300 psi)	2
69	95306255	95306255	95306255	Hose Clamp	2

*3 qty. of p/n 98815300 for brass trim only.

WET PILOT LINE SINGLE INTERLOCK PREACTION TRIM

4"(100MM), 165MM, 6"(150MM), 8"(200MM)

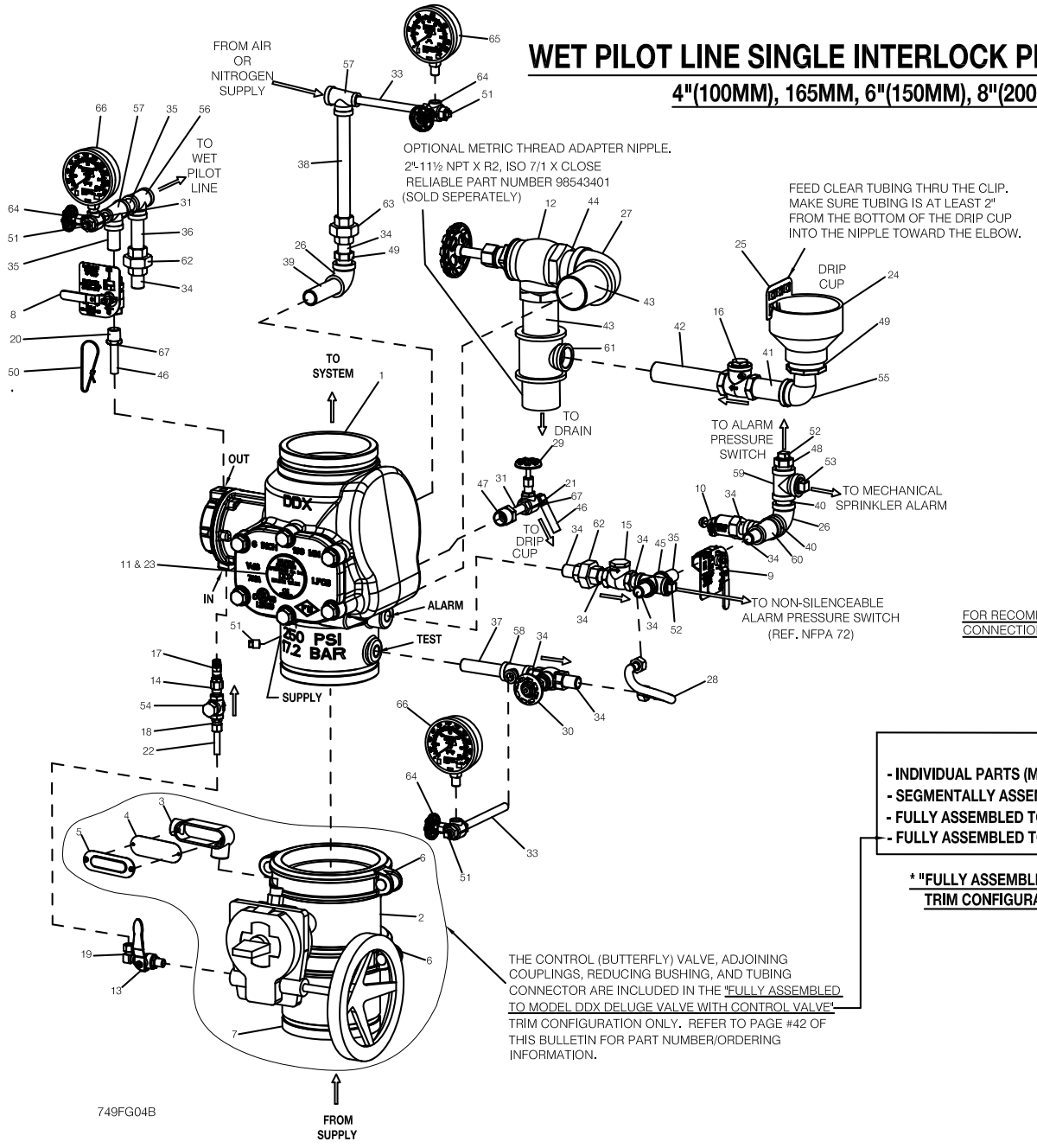

FOR RECOMMENDED INSTALLATION LOCATION FOR A FIRE DEPT. CONNECTION (FDC) REFER TO NFPA 13 APPENDIX A.8.16.1.1

AVAILABLE TRIM CONFIGURATIONS:

- **INDIVIDUAL PARTS (MODEL DDX DELUGE VALVE SOLD SEPARATELY)**
- **SEGMENTALLY ASSEMBLED (MODEL DDX DELUGE VALVE SOLD SEPARATELY)**
- **FULLY ASSEMBLED TO MODEL DDX DELUGE VALVE WITHOUT CONTROL VALVE**
- **FULLY ASSEMBLED TO MODEL DDX DELUGE VALVE WITH CONTROL VALVE***

*** "FULLY ASSEMBLED TO MODEL DDX DELUGE VALVE WITH CONTROL VALVE" TRIM CONFIGURATION (NOT AVAILABLE WITH 165MM MODEL DDX VALVE)**

THE CONTROL (BUTTERFLY) VALVE, ADJOINING COUPLINGS, REDUCING BUSHING, AND TUBING CONNECTOR ARE INCLUDED IN THE "FULLY ASSEMBLED TO MODEL DDX DELUGE VALVE WITH CONTROL VALVE" TRIM CONFIGURATION ONLY. REFER TO PAGE #42 OF THIS BULLETIN FOR PART NUMBER/ORDERING INFORMATION.

Fig. 4

Large DDX Wet Pilot Line SI Trim (Refer to Fig. 4)

Item No.	Part No.			Description	QTY.
	Galvanized	Brass	Black Pipe		
1	6103060024	6103060024	6103060024	Valve Assembly, 4" (100mm) - For 4" Assembly Only	1
	6103040026	6103040026	6103040026	Valve Assembly, 6" (150mm) - For 6" Assembly Only	
	6103060028	6103060028	6103060028	Valve Assembly, 165mm - For 165mm Assembly Only	
	6103080001	6103080001	6103080001	Valve Assembly, 8" (200mm) - For 8" Assembly Only	
2	7M99002655	7M99002655	7M99002655	Butterfly Valve, 4" - For 4" Assembly Only	1
	7M99002656	7M99002656	7M99002656	Butterfly Valve, 6" - For 6" Assembly Only	
	7M99002657	7M99002657	7M99002657	Butterfly Valve, 8" - For 8" Assembly Only	
3	98020036	98020036	98020036	Conduit Body, 1/2"	1
4	98020034	98020034	98020034	Conduit Cover Gasket	1
5	98020033	98020033	98020033	Conduit Body Cover	1
6	7G05161600	7G05161600	7G05161600	Rigid Coupling, 4" - For 4" Assembly Only	2
	7G05242400	7G05242400	7G05242400	Rigid Coupling, 6" - For 6" Assembly Only	
	7G05323200	7G05323200	7G05323200	Rigid Coupling, 8" - For 8" Assembly Only	
7	91004004	91004004	91004004	Inlet Spool, 4" - For 4" Assembly Only	1
	91004006	91004006	91004006	Inlet Spool, 6" - For 6" Assembly Only	
	91004008	91004008	91004008	Inlet Spool, 8" - For 8" Assembly Only	
8	78653000	78653000	78653000	Manual Emergency Station Assembly	1
9	78653004	78653004	78653004	Valve Caution Station Assembly	1
10	78653100	78653100	78653100	Ball Drip Valve, ½"	1
11	99080002	99080002	99080002	Adhesive Pad	1
12	98840100	98840100	98840100	Angle Valve, 2"	1
13	98840117	98840117	98840117	Ball Valve, ¼" NPTF x ¼" NPTM	1
14	98840188	98840188	98840188	Check Valve, ¼" NPTM x ¼" NPTF	1
15	98840181	98840181	98840181	Check Valve, Horizontal Swing, ½" NPT	1
16	98840145	98840145	98840145	Check Valve, Horizontal Swing, 1" NPT	1
17	98840147	98840147	98840147	Check Valve, Inline Poppet, ¼"	1
18	92056702	92056702	92056702	Compression Connector, 3/8" ID Tube x ¼" NPT	1
19	92056703	92056703	92056703	Compression Connector, Elbow 3/8" ID Tube x ¼" NPT	1
20	92056810	92056810	92056810	Connector, 3/8" ID Tube x ½" NPT	1
21	92056705	92056705	92056705	Connector, Elbow, 3/8" ID Tube x ¼" NPT	1
22	96686722	96686722	96686722	Copper Tubing, 3/8" OD x 2 ft.	1
23	94616917	94616917	94616917	Single Interlock Nameplate	1
24	98050004	98050004	98050004	Drain Cup, PVC	1
25	95306270	95306270	95306270	Drain Hose Clip	1
26	98174402	98174441	98164400	Elbow, ¾"	2
27	98174405	98174444	98164405	Elbow, 2"	1
28	96920912	96920912	96920912	Flex Line, ½"	1
29	98840172	98840172	98840172	Globe Valve, ¼"	1

Item No.	Part No.			Description	QTY.
	Galvanized	Brass	Black Pipe		
30	98840171	98840171	98840171	Globe Valve, ½"	1
31	98543226	98533226	98523213	Nipple ¼" x 1½"	1
32	98543225	98533225	98573220	Nipple ¼" x 2½"	1
33	98543217	98533217	98523217	Nipple ¼" x 6"	2
34	98543223	98533223	98523210	Nipple ½" x 1½"	10
35	98543209	98533209	98523209	Nipple ½" x 2"	3
36	98543230	98533230	98523230	Nipple ½" x 3"	1
37	98543216	98533216	98523216	Nipple ½" x 3½"	1
38	98543237	98533237	98523250	Nipple ½" x 8"	1
39	98543234	98533253	98523247	Nipple ¾" x 3½"	1
40	98543279	98533279	98523241	Nipple ¾" x Close	2
41	98543222	98533222	98523224	Nipple 1" x 3½"	1
42	98543266	98533266	98523228	Nipple 1" x 6"	1
43	98543262	98533262	98523262	Nipple 2" x 3½"	2
44	98543238	98533238	98523254	Nipple 2" x Close	1
45	98750003	98750033	98750013	Pipe Cross, ½"	1
46	96686756	96686756	96686756	PVC Tubing, 3/8" ID x 6 ft.	1
47	98048025	98058025	98048011	Reducer Bushing, ¾" x ¼"	1
48	98048022	98058022	98048012	Reducer Bushing, ¾" x ½"	2
49	98048015	98048015	98048015	Reducer Bushing, 2" Spigot x 1" NPTF, PVC	1
50	89141112	89141112	89141112	Retaining Tie	9
51	98614403	98614412	98604403	Square Head Plug, ¼"	4
52	98604406	98614411	98604402	Square Head Plug, ½"	2
53	98614401	98614413	98604401	Square Head Plug, ¾"	1
54	98727607	98727607	98727607	Strainer, ¼"	1
55	98174416	98174449	98174412	Street Elbow, 1"	1
56	98761651	96606915	98761603	Tee, ½"	1
57	98761649	96606916	98761604	Tee, ½" x ¼" x ½"	2
58	96606607	96606912	98761605	Tee, ½" x ½" x ¼"	1
59	96606601	96606911	98766521	Tee, ¾"	1
60	96606612	96606913	98761614	Tee, ¾" x ½" x ½"	1
61	96606627	96606914	98761618	Tee, 2" x 2" x 1"	1
62	98815200	*98815300	98805200	Union, ½"	2
63	98815204	N/A	98845204	Union, ½", O-ring Seal	1
64	98840160	98840160	98840160	Valve, 3-way, ¼"	3
65	98248000	98248000	98248000	Air Pressure Gauge (0-80 psi)	1
66	98248001	98248001	98248001	Water Pressure Gauge (0-300 psi)	2
67	95306255	95306255	95306255	Hose Clamp	2

*3 qty. of p/n 98815300 for brass trim only.

ELECTRIC ACTUATION SINGLE INTERLOCK PREACTION TRIM

2"(50MM), 2-1/2"(65MM), 76MM, 3"(80MM)

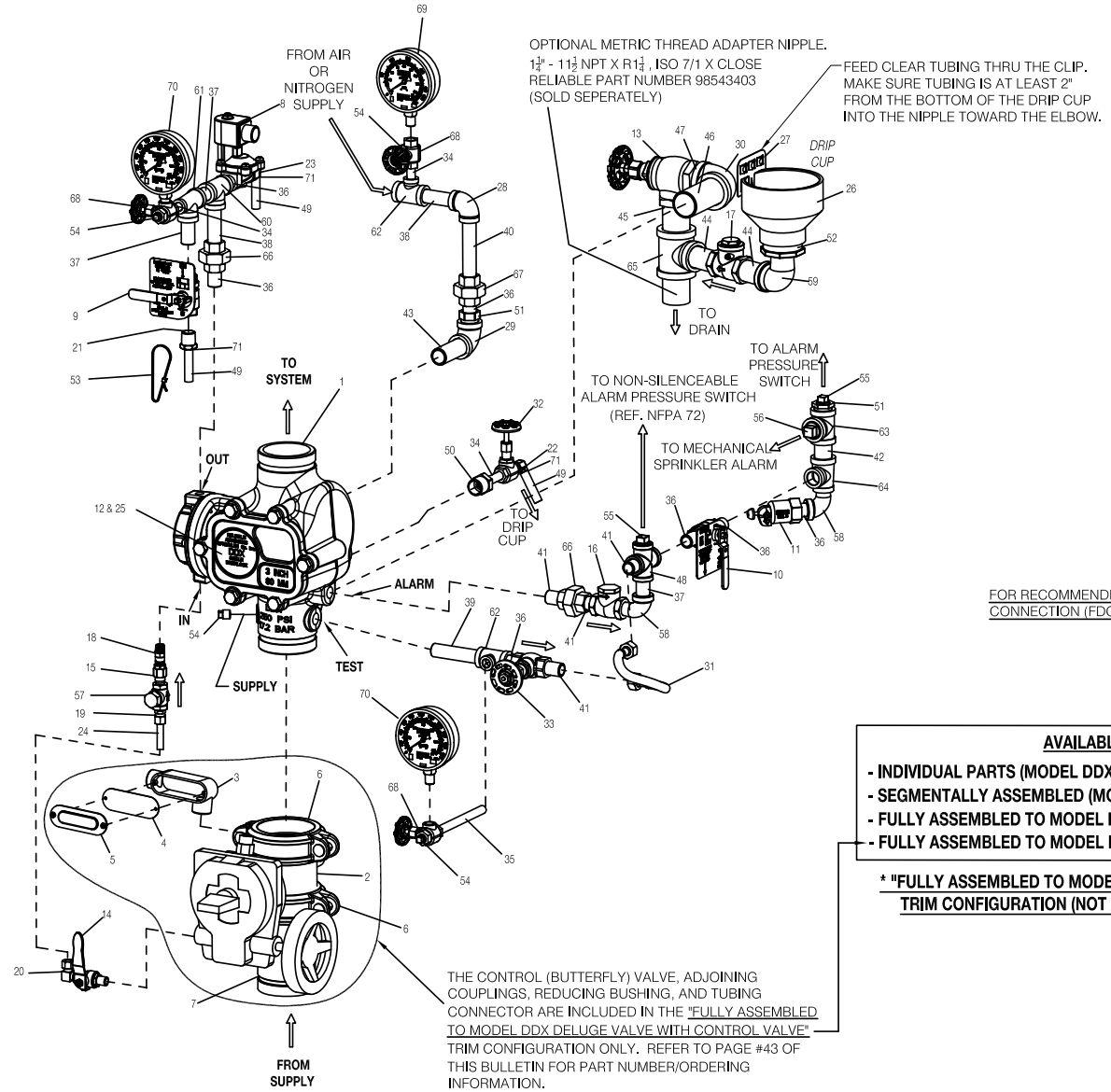

Fig. 5

Small DDX Electric Actuation SI Trim (Refer to Fig. 5)

Item No.	Part No.			Description	QTY.
	Galvanized	Brass	Black Pipe		
1	6103022000	6103022000	6103022000	Valve Assembly, 2" (50mm) - For 2" Assembly Only	1
	6103022500	6103022500	6103022500	Valve Assembly, 2½" (65mm) - For 2½" Assembly Only	
	6103027600	6103027600	6103027600	Valve Assembly, 76mm - For 76mm Assembly Only	
	6103030000	6103030000	6103030000	Valve Assembly, 3" (80mm) - For 3" Assembly Only	
2	6990003549	6990003549	6990003549	Butterfly Valve, 2" - For 2" Assembly Only	1
	7M99002653	7M99002653	7M99002653	Butterfly Valve, 2½" - For 2½" Assembly Only	
	7M99002654	7M99002654	7M99002654	Butterfly Valve, 3" - For 3" Assembly Only	
3	98020036	98020036	98020036	Conduit Body, 1/2"	1
4	98020034	98020034	98020034	Conduit Cover Gasket	1
5	98020033	98020033	98020033	Conduit Body Cover	1
6	7G05080800	7G05080800	7G05080800	Rigid Coupling, 2" - For 2" Assembly Only	2
	7G05101000	7G05101000	7G05101000	Rigid Coupling, 2½" - For 2½" Assembly Only	
	7G05121200	7G05121200	7G05121200	Rigid Coupling, 3" - For 3" Assembly Only	
7	91004002	91004002	91004002	Inlet Spool, 2" - For 2" Assembly Only	1
	91004001	91004001	91004001	Inlet Spool, 2½" - For 2½" Assembly Only	
	91004003	91004003	91004003	Inlet Spool, 3" - For 3" Assembly Only	
8	6871020000	6871020000	6871020000	Solenoid Valve, 175 psi Rated	1
	6871020020	6871020020	6871020020	Solenoid Valve, 300 psi Rated	
9	78653000	78653000	78653000	Manual Emergency Station Assembly	1
10	78653004	78653004	78653004	Valve Caution Station Assembly	1
11	78653100	78653100	78653100	Ball Drip Valve, ½"	1
12	99080002	99080002	99080002	Adhesive Pad	1
13	98840106	98840106	98840106	Angle Valve, 1¼"	1
14	98840117	98840117	98840117	Ball Valve, ¼" NPTF x ¼" NPTM	1
15	98840188	98840188	98840188	Check Valve, ¼" NPTM x ¼" NPTF	1
16	98840181	98840181	98840181	Check Valve, Horizontal Swing, ½" NPT	1
17	98840145	98840145	98840145	Check Valve, Horizontal Swing, 1" NPT	1
18	98840147	98840147	98840147	Check Valve, Inline Poppet, ¼"	1
19	92056702	92056702	92056702	Compression Connector, 3/8" ID Tube x ¼" NPT	1
20	92056703	92056703	92056703	Compression Connector, Elbow 3/8" ID Tube x ¼" NPT	1
21	92056810	92056810	92056810	Connector, 3/8" ID Tube x ½" NPT	1
22	92056705	92056705	92056705	Connector, Elbow, 3/8" ID Tube x ¼" NPT	1
23	92056704	92056704	92056704	Connector, Elbow, 3/8" ID Tube x ½" NPT	1
24	96686722	96686722	96686722	Copper Tubing, 3/8" OD x 2 ft.	1
25	94616917	94616917	94616917	Single Interlock Nameplate	1
26	98050004	98050004	98050004	Drain Cup, PVC	1
27	95306270	95306270	95306270	Drain Hose Clip	1
28	98174401	98174440	98164401	Elbow, ½"	1
29	98174402	98174441	98164400	Elbow, ¾"	1
30	98174414	98174443	98164407	Elbow, 1¼"	1
31	96920912	96920912	96920912	Flex Line, ½"	1
32	98840172	98840172	98840172	Globe Valve, ¼"	1
33	98840171	98840171	98840171	Globe Valve, ½"	1
34	98543226	98533226	98523213	Nipple ¼" x 1½"	3
35	98543217	98533217	98523217	Nipple ¼" x 6"	1
36	98543223	98533223	98523210	Nipple ½" x 1½"	7
37	98543209	98533209	98523209	Nipple ½" x 2"	4
38	98543230	98533230	98523230	Nipple ½" x 3"	2
39	98543207	98533207	98523207	Nipple ½" x 4"	1
40	98543228	98533228	98523234	Nipple ½" x 4½"	1
41	98543212	98533212	98523221	Nipple ½" x Close	4
42	98543232	98533232	98523242	Nipple ¾" x 2"	1
43	98543231	98533231	98523240	Nipple ¾" x 3"	1
44	98543263	98533263	98523261	Nipple 1" x 3"	2
45	98543239	98533239	98523256	Nipple 1¼" x 3"	1
46	98543250	98533264	98523264	Nipple 1¼" x 4"	1
47	98543285	98533285	98523274	Nipple 1¼" x Close	1
48	98750003	9870033	98761604	Pipe Cross, ½"	1
49	96686756	96686756	96686756	PVC Tubing, 3/8" ID x 6 ft.	1
50	98048025	98058025	98048011	Reducer Bushing, ¾" x ¼"	1
51	98048022	98058022	98048012	Reducer Bushing, ¾" x ½"	2
52	98048015	98048015	98048015	Reducer Bushing, 2" Spigot x 1" NPTF, PVC	1
53	89141112	89141112	89141112	Retaining Tie	9
54	98614403	98614412	98604403	Square Head Plug, ¼"	3
55	98604406	98614411	98604402	Square Head Plug, ½"	2
56	98614401	98614413	98604401	Square Head Plug, ¾"	1
57	98727607	98727607	98727607	Strainer, ¼"	1
58	98174400	998174446	98164409	Street Elbow, ½"	2
59	98174416	98174449	98174412	Street Elbow, 1"	1
60	98761651	96606915	98761603	Tee, ½"	1
61	98761649	96606916	98761604	Tee, ½" x ¼" x ½"	1
62	96606607	96606912	98761605	Tee, ½" x ½" x ¼"	2
63	96606601	96606911	98766521	Tee, ¾"	1
64	96606612	96606913	98761614	Tee, ¾" x ½" x ½"	1
65	96606630	96606917	98761621	Tee, 1¼" x 1¼" x 1"	1
66	98815200	*98815300	98805200	Union, ½"	2
67	98815204	N/A	98845204	Union, ½", O-ring Seal	1
68	98840160	98840160	98840160	Valve, 3-way, ¼"	3
69	98248000	98248000	98248000	Air Pressure Gauge (0-80 psi)	1
70	98248001	98248001	98248001	Water Pressure Gauge (0-300 psi)	2
71	95306255	95306255	95306255	Hose Clamp	3

*3 qty. of p/n 98815300 for brass trim only.

ELECTRIC ACTUATION SINGLE INTERLOCK PREACTION TRIM

4"(100MM), 165MM, 6"(150MM), 8"(200MM)

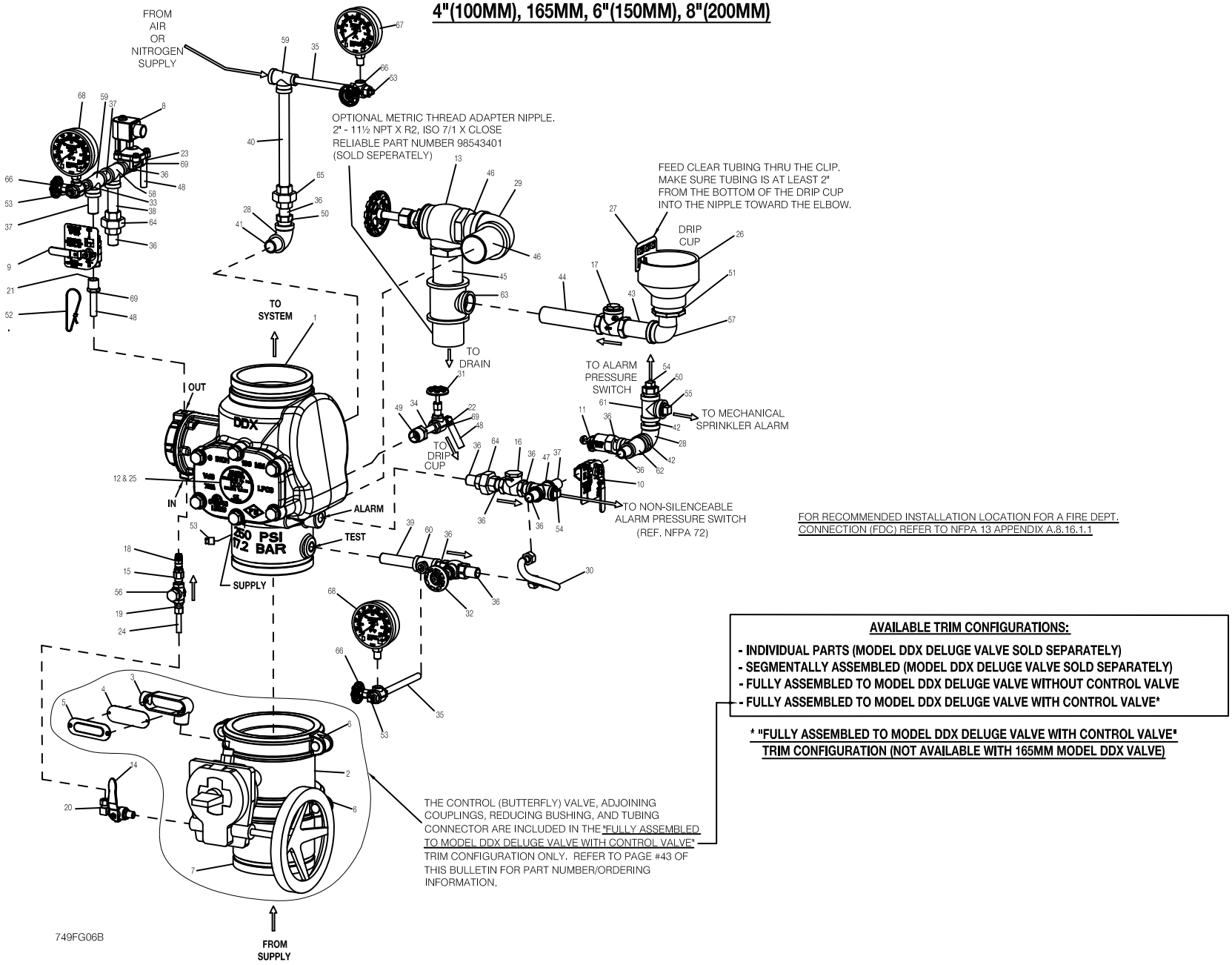

FOR RECOMMENDED INSTALLATION LOCATION FOR A FIRE DEPT. CONNECTION (FDC) REFER TO NFPA 13 APPENDIX A.8.16.1.1

AVAILABLE TRIM CONFIGURATIONS:

- **INDIVIDUAL PARTS (MODEL DDX DELUGE VALVE SOLD SEPARATELY)**
- **SEGMENTALLY ASSEMBLED (MODEL DDX DELUGE VALVE SOLD SEPARATELY)**
- **FULLY ASSEMBLED TO MODEL DDX DELUGE VALVE WITHOUT CONTROL VALVE**
- **FULLY ASSEMBLED TO MODEL DDX DELUGE VALVE WITH CONTROL VALVE***

*** "FULLY ASSEMBLED TO MODEL DDX DELUGE VALVE WITH CONTROL VALVE" TRIM CONFIGURATION (NOT AVAILABLE WITH 165MM MODEL DDX VALVE)**

THE CONTROL (BUTTERFLY) VALVE, ADJOINING COUPLINGS, REDUCING BUSHING, AND TUBING CONNECTOR ARE INCLUDED IN THE "FULLY ASSEMBLED TO MODEL DDX DELUGE VALVE WITH CONTROL VALVE" TRIM CONFIGURATION ONLY. REFER TO PAGE #43 OF THIS BULLETIN FOR PART NUMBER/ORDERING INFORMATION.

Fig. 6

Large DDX Electric Actuation SI Trim (Refer to Fig. 6)

Item No.	Part No.			Description	QTY.
	Galvanized	Brass	Black Pipe		
1	6103060024	6103060024	6103060024	Valve Assembly, 4" (100mm) - For 4" Assembly Only	1
	6103040026	6103040026	6103040026	Valve Assembly, 6" (150mm) - For 6" Assembly Only	
	6103060028	6103060028	6103060028	Valve Assembly, 165mm - For 165mm Assembly Only	
	6103080001	6103080001	6103080001	Valve Assembly, 8" (200mm) - For 8" Assembly Only	
2	7M99002655	7M99002655	7M99002655	Butterfly Valve, 4" - For 4" Assembly Only	1
	7M99002656	7M99002656	7M99002656	Butterfly Valve, 6" - For 6" Assembly Only	
	7M99002657	7M99002657	7M99002657	Butterfly Valve, 8" - For 8" Assembly Only	
3	98020036	98020036	98020036	Conduit Body, 1/2"	1
4	98020034	98020034	98020034	Conduit Cover Gasket	1
5	98020033	98020033	98020033	Conduit Body Cover	1
6	7G05161600	7G05161600	7G05161600	Rigid Coupling, 4" - For 4" Assembly Only	2
	7G05242400	7G05242400	7G05242400	Rigid Coupling, 6" - For 6" Assembly Only	
	7G05323200	7G05323200	7G05323200	Rigid Coupling, 8" - For 8" Assembly Only	
7	91004004	91004004	91004004	Inlet Spool, 4" - For 4" Assembly Only	1
	91004006	91004006	91004006	Inlet Spool, 6" - For 6" Assembly Only	
	91004008	91004008	91004008	Inlet Spool, 8" - For 8" Assembly Only	
8	6871020000	6871020000	6871020000	Solenoid Valve, 175 psi Rated	1
	6871020020	6871020020	6871020020	Solenoid Valve, 300 psi Rated	
9	78653000	78653000	78653000	Manual Emergency Station Assembly	1
10	78653004	78653004	78653004	Valve Caution Station Assembly	1
11	78653100	78653100	78653100	Ball Drip Valve, ½"	1
12	99080002	99080002	99080002	Adhesive Pad	1
13	98840100	98840100	98840100	Angle Valve, 2"	1
14	98840117	98840117	98840117	Ball Valve, ¼" NPTF x ¼" NPTM	1
15	98840188	98840188	98840188	Check Valve, ¼" NPTM x ¼" NPTF"	1
16	98840181	98840181	98840181	Check Valve, Horizontal Swing, ½" NPT	1
17	98840145	98840145	98840145	Check Valve, Horizontal Swing, 1" NPT	1
18	98840147	98840147	98840147	Check Valve, Inline Poppet, ¼"	1
19	92056702	92056702	92056702	Compression Connector, 3/8" ID Tube x ¼" NPT	1
20	92056703	92056703	92056703	Compression Connector, Elbow 3/8" ID Tube x ¼" NPT	1
21	92056810	92056810	92056810	Connector, 3/8" ID Tube x ½" NPT	1
22	92056705	92056705	92056705	Connector, Elbow, 3/8" ID Tube x ¼" NPT	1
23	92056704	92056704	92056704	Connector, Elbow, 3/8" ID Tube x ½" NPT	1
24	96686722	96686722	96686722	Copper Tubing, 3/8" OD x 2 ft.	1
25	94616917	94616917	94616917	Single Interlock Nameplate	1
26	98050004	98050004	98050004	Drain Cup, PVC	1
27	95306270	95306270	95306270	Drain Hose Clip	1
28	98174402	98174441	98164400	Elbow, ¾"	2

Item No.	Part No.			Description	QTY.
	Galvanized	Brass	Black Pipe		
29	98174405	9817444	98164405	Elbow, 2"	1
30	96920912	96920912	96920912	Flex Line, ½"	1
31	98840172	98840172	98840172	Globe Valve, ¼"	1
32	98840171	98840171	98840171	Globe Valve, ½"	1
33	98543226	98533226	98523213	Nipple ¼" x 1½"	1
34	98543225	98533225	98573220	Nipple ¼" x 2½"	1
35	98543217	98533217	98523217	Nipple ¼" x 6"	2
36	98543223	98533223	98523210	Nipple ½" x 1½"	11
37	98543209	98533209	98523209	Nipple ½" x 2"	3
38	98543230	98533230	98523230	Nipple ½" x 3"	1
39	98543216	98533216	98523216	Nipple ½" x 3½"	1
40	98543237	98533237	98523250	Nipple ½" x 8"	1
41	98543234	98533253	98523247	Nipple ¾" x 3½"	1
42	98543279	98533279	98523241	Nipple ¾" x Close	2
43	98543222	98533222	98523224	Nipple 1" x 3½"	1
44	98543266	98533266	98523228	Nipple 1" x 6"	1
45	98543262	98533262	98523262	Nipple 2" x 3½"	2
46	98543238	98533238	98523254	Nipple 2" x Close	1
47	98750003	98750033	98750013	Pipe Cross, ½"	1
48	96686756	96686756	96686756	PVC Tubing, 3/8" ID x 6 ft.	1
49	98048025	98058025	98048011	Reducer Bushing, ¾" x ¼"	1
50	98048022	98058022	98048012	Reducer Bushing, ¾" x ½"	2
51	98048015	98048015	98048015	Reducer Bushing, 2" Spigot x 1" NPTF, PVC	1
52	89141112	89141112	89141112	Retaining Tie	9
53	98614403	98614412	98604403	Square Head Plug, ¼"	4
54	98604406	98614411	98604402	Square Head Plug, ½"	2
55	98614401	986114413	98604401	Square Head Plug, ¾"	1
56	98727607	98727607	98727607	Strainer, ¼"	1
57	98174416	98174449	98174412	Street Elbow, 1"	1
58	98761651	96606915	98761603	Tee, ½"	1
59	98761649	96606916	98761604	Tee, ½" x ¼" x ½"	2
60	96606607	96606912	98761605	Tee, ½" x ½" x ¼"	1
61	96606601	96606911	98766521	Tee, ¾"	1
62	96606612	96606915	98761614	Tee, ¾" x ½" x ½"	1
63	96606627	96606914	98761618	Tee, 2" x 2" x 1"	1
64	98815200	*98851300	98805200	Union, ½"	2
65	98815204	N/A	98845204	Union, ½", O-ring Seal	1
66	98840160	98840160	98840160	Valve, 3-way, ¼"	3
67	98248000	98248000	98248000	Air Pressure Gauge (0-80 psi)	1
68	98248001	98248001	98248001	Water Pressure Gauge (0-300 psi)	2
69	95306255	95306255	95306255	Hose Clamp	3

*3 qty. of p/n 98815300 for brass trim only.

DRY PILOT SINGLE INTERLOCK PREACTION TRIM

2"(50MM), 2-1/2"(65MM), 76MM, 3"(80MM)

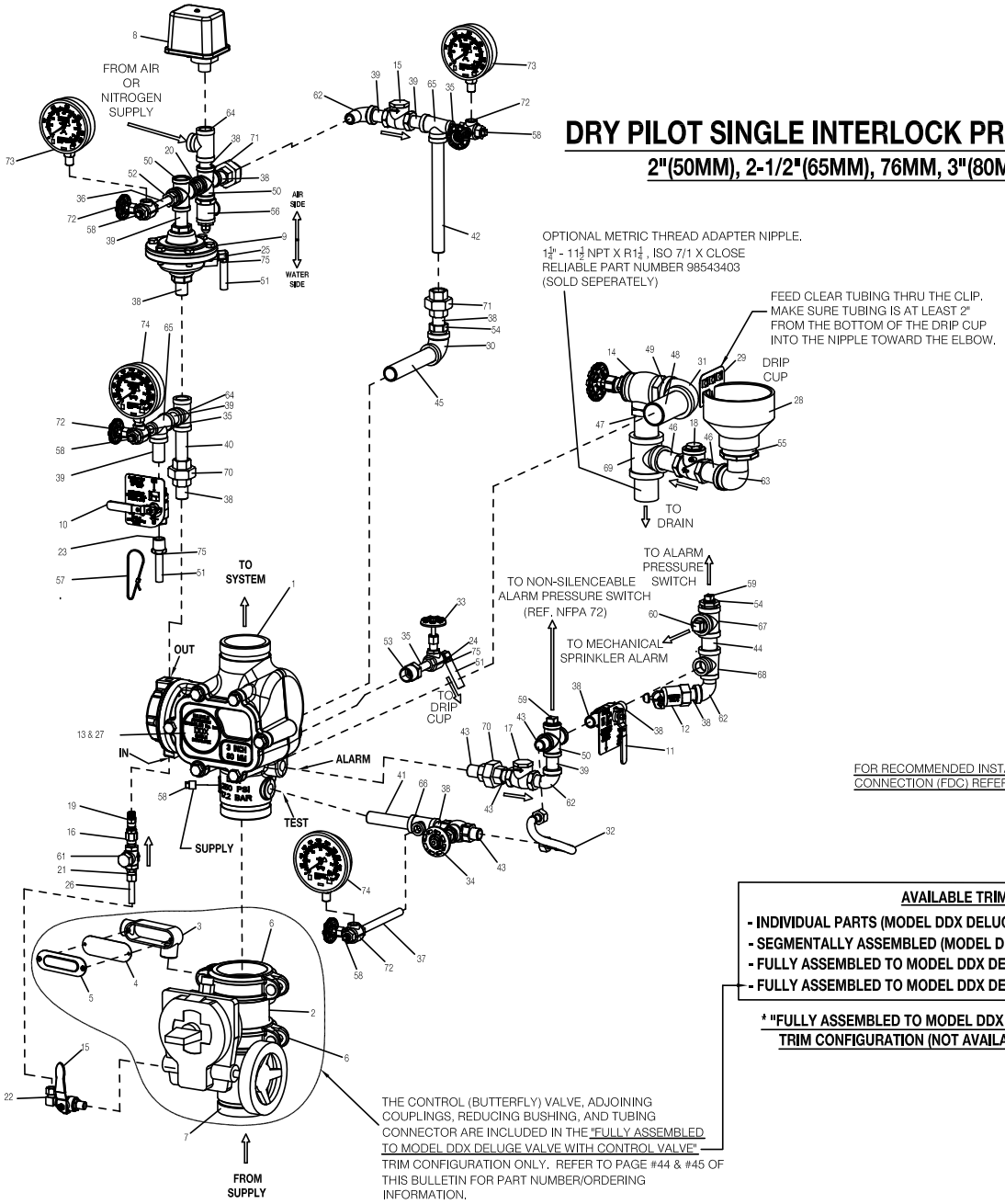

FOR RECOMMENDED INSTALLATION LOCATION FOR A FIRE DEPT. CONNECTION (FDC) REFER TO NFPA 13 APPENDIX A.8.16.1.1

AVAILABLE TRIM CONFIGURATIONS:

- **INDIVIDUAL PARTS (MODEL DDX DELUGE VALVE SOLD SEPARATELY)**
- **SEGMENTALLY ASSEMBLED (MODEL DDX DELUGE VALVE SOLD SEPARATELY)**
- **FULLY ASSEMBLED TO MODEL DDX DELUGE VALVE WITHOUT CONTROL VALVE**
- **FULLY ASSEMBLED TO MODEL DDX DELUGE VALVE WITH CONTROL VALVE***

*** "FULLY ASSEMBLED TO MODEL DDX DELUGE VALVE WITH CONTROL VALVE" TRIM CONFIGURATION (NOT AVAILABLE WITH 76MM MODEL DDX VALVE)**

THE CONTROL (BUTTERFLY) VALVE, ADJOINING COUPLINGS, REDUCING BUSHING, AND TUBING CONNECTOR ARE INCLUDED IN THE "FULLY ASSEMBLED TO MODEL DDX DELUGE VALVE WITH CONTROL VALVE" TRIM CONFIGURATION ONLY. REFER TO PAGE #44 & #45 OF THIS BULLETIN FOR PART NUMBER/ORDERING INFORMATION.

749FG07B

Fig. 7

Small DDX Dry Pilot Line SI (Refer to Fig. 7)

Item No.	Part No.			Description	QTY.
	Galvanized	Brass	Black Pipe		
1	6103022000	6103022000	6103022000	Valve Assembly, 2" (50mm) - For 2" Assembly Only	1
	6103022500	6103022500	6103022500	Valve Assembly, 2½" (65mm) - For 2½" Assembly Only	
	6103027600	6103027600	6103027600	Valve Assembly, 76mm - For 76mm Assembly Only	
	6103030000	6103030000	6103030000	Valve Assembly, 3" (80mm) - For 3" Assembly Only	
2	6990003549	6990003549	6990003549	Butterfly Valve, 2" - For 2" Assembly Only	1
	7M99002654	7M99002654	7M99002654	Butterfly Valve, 2½" - For 2½" Assembly Only	
	7M99002655	7M99002655	7M99002655	Butterfly Valve, 3" - For 3" Assembly Only	
3	98020036	98020036	98020036	Conduit Body, 1/2"	1
4	98020034	98020034	98020034	Conduit Cover Gasket	1
5	98020033	98020033	98020033	Conduit Body Cover	1
6	7G05080800	7G05080800	7G05080800	Rigid Coupling, 2" - For 2" Assembly Only	2
	7G05101000	7G05101000	7G05101000	Rigid Coupling, 2½" - For 2½" Assembly Only	
	7G05121200	7G05121200	7G05121200	Rigid Coupling, 3" - For 3" Assembly Only	
7	91004002	91004002	91004002	Inlet Spool, 2" - For 2" Assembly Only	1
	91004001	91004001	91004001	Inlet Spool, 2½" - For 2½" Assembly Only	
	91004003	91004003	91004003	Inlet Spool, 3" - For 3" Assembly Only	
8	6990019313	6990019313	6990019313	Potter Pressure Switch (PS25-2) (cULus/FM)	1
	6990019536	6990019536	6990019536	Potter Pressure Switch (PS25-2) (VdS)	
9	71030010	71030010	71030010	Model LP Pilot Line Actuator	1
10	78653000	78653000	78653000	Manual Emergency Station Assembly	1
11	78653004	78653004	78653004	Valve Caution Station Assembly	1
12	78653100	78653100	78653100	Ball Drip Valve, ½"	1
13	99080002	99080002	99080002	Adhesive Pad	1
14	98840106	98840106	98840106	Angle Valve, 1¼"	1
15	98840117	98840117	98840117	Ball Valve, ¼" NPTF x ¼" NPTM	1
16	98840188	98840188	98840188	Check Valve, ¼" NPTM x ¼" NPTF	1
17	98840181	98840181	98840181	Check Valve, Horizontal Swing, ½" NPT	2
18	98840145	98840145	98840145	Check Valve, Horizontal Swing, 1" NPT	1
19	98840147	98840147	98840147	Check Valve, Inline Poppet, ¼"	1
20	96816904	96816904	96816904	Check Valve, Inline Poppet, ½"	1
21	92056702	92056702	92056702	Compression Connector, 3/8" ID Tube x ¼" NPT	1
22	92056703	92056703	92056703	Compression Connector, Elbow 3/8" ID Tube x ¼" NPT	1
23	92056810	92056810	92056810	Connector, 3/8" ID Tube x ½" NPT	1
24	92056705	92056705	92056705	Connector, Elbow, 3/8" ID Tube x ¼" NPT	1
25	92056704	92056704	92056704	Connector, Elbow, 3/8" ID Tube x ½" NPT	1
26	96686722	96686722	96686722	Copper Tubing, 3/8" OD x 2 ft.	1
27	94616917	94616917	94616917	Single Interlock Nameplate	1
28	98050004	98050004	98050004	Drain Cup, PVC	1
29	95306270	95306270	95306270	Drain Hose Clip	1
30	98174402	98174441	98164400	Elbow, ¾"	1
31	98174414	98174443	98164407	Elbow, 1¼"	1
32	96920912	96920912	96920912	Flex Line, ½"	1
33	98840172	98840172	98840172	Globe Valve, ¼"	1
34	98840171	98840171	98840171	Globe Valve, ½"	1
35	98543226	98533226	98523213	Nipple ¼" x 1½"	3
36	98543220	98533220	98523219	Nipple ¼" x 3"	1
37	98543217	98533217	98523217	Nipple ¼" x 6"	1
38	98543223	98533223	98523210	Nipple ½" x 1½"	9
39	98543209	98533209	98523209	Nipple ½" x 2"	6
40	98543230	98533230	98523230	Nipple ½" x 3"	1
41	98543207	98533207	98523207	Nipple ½" x 4"	1
42	98543235	98533235	98523235	Nipple ½" x 8½"	1
43	98543212	98533212	98523221	Nipple ½" x Close	4
44	98543232	98533232	98523242	Nipple ¾" x 2"	1
45	98543267	98533267	98523263	Nipple ¾" x 6"	1
46	98543263	98533263	98523261	Nipple 1" x 3"	2
47	98543239	98533239	98523256	Nipple 1¼" x 3"	1
48	98543250	98533264	98523264	Nipple 1¼" x 4"	1
49	98543285	98533285	98523274	Nipple 1¼" x Close	1
50	98750003	98750033	98750013	Pipe Cross, ½"	3
51	96686756	96686756	96686756	PVC Tubing, 3/8" ID x 6 ft.	1
52	98048000	98058000	98048020	Reducer Bushing, ½" x ¼"	1
53	98048025	98058025	98048011	Reducer Bushing, ¾" x ¼"	1
54	98048022	98058022	98048012	Reducer Bushing, ¾" x ½"	2
55	98048015	98048015	98048015	Reducer Bushing, 2" Spigot x 1" NPTF, PVC	1
56	98840195	98840195	98840195	Relief Valve, ½" NPT, 33 psi	1
57	89141112	89141112	89141112	Retaining Tie	9
58	98614403	98614412	98604403	Square Head Plug, ¼"	5
59	98604406	98614411	98604402	Square Head Plug, ½"	2
60	98614401	98614413	98604401	Square Head Plug, ¾"	1
61	98727607	98727607	98727607	Strainer, ¼"	1
62	98174400	98174446	98164409	Street Elbow, ½"	3
63	98174416	98174449	98174412	Street Elbow, 1"	1
64	98761651	96606915	98761603	Tee, ½"	2
65	98761649	96606916	98761604	Tee, ½" x ¼" x ½"	2
66	96606607	96606912	98761605	Tee, ½" x ½" x ¼"	1
67	96606601	96606911	98766521	Tee, ¾"	1
68	96606612	96606913	98761614	Tee, ¾" x ½" x ½"	1
69	96606603	96606917	98761621	Tee, 1¼" x 1¼" x 1"	1
70	98815200	*98815300	98805200	Union, ½"	2
71	98815204	N/A	98845204	Union, ½", O-ring Seal	2
72	98840160	98840160	98840160	Valve, 3-way, ¼"	4
73	98248000	98248000	98248000	Air Pressure Gauge (0-80 psi)	2
74	98248001	98248001	98248001	Water Pressure Gauge (0-300 psi)	2
75	95306255	95306255	95306255	Hose Clamp	3

*4 qty. of p/n 98815300 for brass trim only.

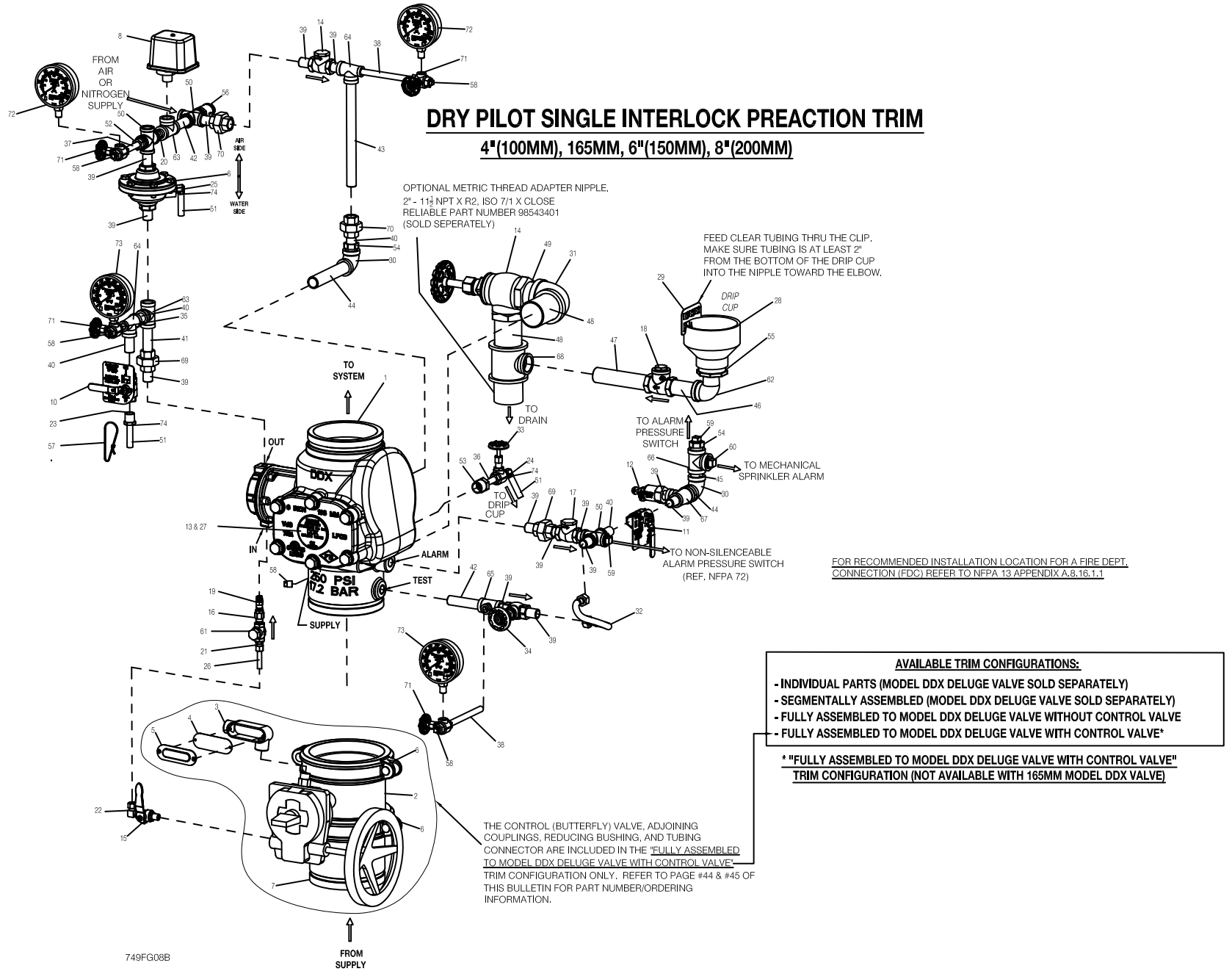
DRY PILOT SINGLE INTERLOCK PREACTION TRIM
4"(100MM), 165MM, 6"(150MM), 8"(200MM)
FROM AIR OR NITROGEN SUPPLY
AIR SIDE
WATER SIDE
OPTIONAL METRIC THREAD ADAPTER NIPPLE.
2" - 11½ NPT X R2, ISO 7/1 X CLOSE
RELIABLE PART NUMBER 98543401
(SOLD SEPERATELY)
FEED CLEAR TUBING THRU THE CLIP.
MAKE SURE TUBING IS AT LEAST 2"
FROM THE BOTTOM OF THE DRIP CUP
INTO THE NIPPLE TOWARD THE ELBOW.
DRIP CUP
TO SYSTEM
TO DRAIN
TO ALARM PRESSURE SWITCH
TO MECHANICAL SPRINKLER ALARM
TO DRIP CUP
TO NON-SILENCEABLE ALARM PRESSURE SWITCH (REF. NFPA 72)
OUT
IN
ALARM
TEST
SUPPLY
250 PSI 17.2 BAR
DDX
FOR RECOMMENDED INSTALLATION LOCATION FOR A FIRE DEPT. CONNECTION (FDC) REFER TO NFPA 13 APPENDIX A.8.16.1.1
AVAILABLE TRIM CONFIGURATIONS:
- INDIVIDUAL PARTS (MODEL DDX DELUGE VALVE SOLD SEPARATELY)
- SEGMENTALLY ASSEMBLED (MODEL DDX DELUGE VALVE SOLD SEPARATELY)
- FULLY ASSEMBLED TO MODEL DDX DELUGE VALVE WITHOUT CONTROL VALVE
- FULLY ASSEMBLED TO MODEL DDX DELUGE VALVE WITH CONTROL VALVE*
* "FULLY ASSEMBLED TO MODEL DDX DELUGE VALVE WITH CONTROL VALVE" TRIM CONFIGURATION (NOT AVAILABLE WITH 165MM MODEL DDX VALVE)
THE CONTROL (BUTTERFLY) VALVE, ADJOINING COUPLINGS, REDUCING BUSHING, AND TUBING CONNECTOR ARE INCLUDED IN THE "FULLY ASSEMBLED TO MODEL DDX DELUGE VALVE WITH CONTROL VALVE" TRIM CONFIGURATION ONLY. REFER TO PAGE #44 & #45 OF THIS BULLETIN FOR PART NUMBER/ORDERING INFORMATION.
FROM SUPPLY
749FG08B

Fig. 8

Large DDX Dry Pilot Line SI (See Fig. 8)

Item No.	Part No.			Description	QTY.
	Galvanized	Brass	Black Pipe		
1	6103060024	6103060024	6103060024	Valve Assembly, 4" (100mm) - For 4" Assembly Only	1
	6103040026	6103040026	6103040026	Valve Assembly, 6" (150mm) - For 6" Assembly Only	
	6103060028	6103060028	6103060028	Valve Assembly, 165mm - For 165mm Assembly Only	
	6103080001	6103080001	6103080001	Valve Assembly, 8" (200mm) - For 8" Assembly Only	
2	7M99002655	7M99002655	7M99002655	Butterfly Valve, 4" - For 4" Assembly Only	1
	7M99002656	7M99002656	7M99002656	Butterfly Valve, 6" - For 6" Assembly Only	
	7M99002657	7M99002657	7M99002657	Butterfly Valve, 8" - For 8" Assembly Only	
3	98020036	98020036	98020036	Conduit Body, 1/2"	1
4	98020034	98020034	98020034	Conduit Cover Gasket	1
5	98020033	98020033	98020033	Conduit Body Cover	1
6	7G05161600	7G05161600	7G05161600	Rigid Coupling, 4" - For 4" Assembly Only	2
	7G05242400	7G05242400	7G05242400	Rigid Coupling, 6" - For 6" Assembly Only	
	7G05323200	7G05323200	7G05323200	Rigid Coupling, 8" - For 8" Assembly Only	
7	91004004	91004004	91004004	Inlet Spool, 4" - For 4" Assembly Only	1
	91004006	91004006	91004006	"Inlet Spool, 6"" - For 6"" Assembly Only"	
	91004008	91004008	91004008	Inlet Spool, 8" - For 8" Assembly Only	
8	6990019313	6990019313	6990019313	Potter Pressure Switch (PS25-2) (cULus/FM)	1
	6990019536	6990019536	6990019536	Potter Pressure Switch (PS25-2) (ULC)	
9	71030010	71030010	71030010	Model LP Pilot Line Actuator	1
10	78653000	78653000	78653000	Manual Emergency Station Assembly	1
11	78653004	78653004	78653004	Valve Caution Station Assembly	1
12	78653100	78653100	78653100	Ball Drip Valve, ½"	1
13	99080002	99080002	99080002	Adhesive Pad	1
14	98840100	98840100	98840100	Angle Valve, 2"	1
15	98840117	98840117	98840117	"Ball Valve, ¼" NPTF x ¼" NPTM	1
16	98840188	98840188	98840188	"Check Valve, ¼" NPTM x ¼" NPTF	1
17	98840181	98840181	98840181	Check Valve, Horizontal Swing, ½" NPT	2
18	98840145	98840145	98840145	Check Valve, Horizontal Swing, 1" NPT	1
19	98840147	98840147	98840147	Check Valve, Inline Poppet, ¼"	1
20	96816904	96816904	96816904	Check Valve, Inline Poppet, ½"	1
21	92056702	92056702	92056702	Compression Connector, 3/8" ID Tube x ¼" NPT"	1
22	92056703	92056703	92056703	Compression Connector, Elbow 3/8" ID Tube x ¼" NPT	1
23	92056810	92056810	92056810	Connector, 3/8" ID Tube x ½" NPT	1
24	92056705	92056705	92056705	Connector, Elbow, 3/8" ID Tube x ¼" NPT	1
25	92056704	92056704	92056704	Connector, Elbow, 3/8" ID Tube x ½" NPT	1
26	96686722	96686722	96686722	Copper Tubing, 3/8" OD x 2 ft.	1
27	94616917	94616917	94616917	Single Interlock Nameplate	1
28	98050004	98050004	98050004	Drain Cup, PVC	1
29	95306270	95306270	95306270	Drain Hose Clip	1
30	98174402	98174441	98164400	Elbow, ¾"	2
31	98174405	98174444	98164405	Elbow, 2"	1
32	96920912	96920912	96920912	Flex Line, ½"	1
33	98840172	98840172	98840172	Globe Valve, ¼"	1
34	98840171	98840171	98840171	Globe Valve, ½"	1
35	98543226	98533226	98523213	Nipple ¼" x 1½"	1
36	98543225	98533225	98573220	Nipple ¼" x 2½"	1
37	98543220	98533230	98523219	Nipple ¼" x 3"	2
38	98543217	98533217	98523217	Nipple ¼" x 6"	2
39	98543223	98533223	98523210	Nipple ½" x 1½"	14
40	98543209	98533209	98523209	Nipple ½" x 2"	3
41	98543230	98533230	98523230	Nipple ½" x 3"	2
42	98543216	98533216	98523216	Nipple ½" x 3½"	2
43	98543252	98533252	98523232	Nipple ½" x 10½"	1
44	98543234	98533253	98523247	Nipple ¾" x 3½" (6" & 8" Versions)	1
	98543282	98533282	98523253	Nipple ¾" x 4" (4" Version)	
45	98543279	98533279	98523241	Nipple ¾" x Close	2
46	98543222	98533222	98523224	Nipple 1" x 3½"	1
47	98543266	98533266	98523228	Nipple 1" x 6"	1
48	98543262	98533262	98523262	Nipple 2" x 3½"	2
49	98543238	98533238	98523254	Nipple 2" x Close	1
50	98750003	98750033	98750013	Pipe Cross, ½"	3
51	96686756	96686756	96686756	PVC Tubing, 3/8" ID x 6 ft.	1
52	98048000	98058000	98048020	Reducer Bushing, ½" x ¼"	1
53	98048025	98058025	98048011	Reducer Bushing, ¾" x ¼"	1
54	98048022	98058022	98048012	Reducer Bushing, ¾" x ½"	2
55	98048015	98048015	98048015	Reducer Bushing, 2" Spigot x 1" NPTF, PVC	1
56	98840195	98840195	98840195	Relief Valve, ½" NPT, 33 psi	1
57	89141112	89141112	89141112	Retaining Tie	9
58	98614403	98614412	98604403	Square Head Plug, ¼"	5
59	98604406	98614411	98604402	Square Head Plug, ½"	2
60	98614401	98614413	98604401	Square Head Plug, ¾"	1
61	98727607	98727607	98727607	Strainer, ¼"	1
62	98174416	98174449	98174412	Street Elbow, 1"	1
63	98761651	96606915	98761603	Tee, ½"	2
64	98761649	96606916	98761604	Tee, ½" x ¼" x ½"	2
65	96606607	96606912	98761605	Tee, ½" x ½" x ¼"	1
66	96606601	96606911	98766521	Tee, ¾"	1
67	96606612	96606913	98761614	Tee, ¾" x ½" x ½"	1
68	96606627	96606914	98761618	Tee, 2" x 2" x 1"	1
69	98815200	*98815300	98805200	Union, ½"	2
70	98815204	N/A	98845204	Union, ½", O-ring Seal	2
71	98840160	98840160	98840160	Valve, 3-way, ¼"	4
72	98248000	98248000	98248000	Air Pressure Gauge (0-80 psi)	2
73	98248001	98248001	98248001	Water Pressure Gauge (0-300 psi)	2
74	95306255	95306255	95306255	Hose Clamp	3

*4 qty. of p/n 98815300 for brass trim only.

Pressurizing Line Connection

The water supply for the push-rod chamber must be provided by connection of its inlet pressurizing line to the water supply piping. Pressurizing lines for multiple Model DDX Deluge Valve push-rod chambers must never be manifolded together, having only a single tap on the water supply piping. Each Model DDX Deluge Valve must have its own push-rod chamber pressurizing line connection.

This connection must be made on the supply side of the water supply control valve (see Fig. 7 or Fig. 8). This can be accomplished by:

- Using a tapped connection directly below or next to the main water supply control valve using a welded outlet or the appropriate mechanical fittings. A grooved-end outlet coupling is one way to achieve this; or
- Using a water supply control valve that has an available threaded (NPT) supply-side tap design to allow for a direct water supply connection to the Model DDX Deluge Valve's push-rod chamber.

Caution: Reliable's DDX valve is designed with an inlet restriction built into the pushrod chamber. It is important not to introduce additional restrictions into the direct water supply connection or the discharge from the pushrod chamber by installing additional valves or improperly installing the copper lines used in the trim of the valve.

Hydrostatic Testing of DDX Valves and DDX Systems

As required by NFPA 13, fire sprinkler systems with working pressures up to and including 150 psi are to be hydrostatically tested at a water pressure of 200 psi and maintain that pressure without loss for two hours. Fire sprinkler systems with working pressures above 150 psi are required to be hydrostatically tested at 50 psi above the system working pressure and maintain that pressure without loss for two hours. In addition to the hydrostatic tests described above, dry pipe and double interlock preaction systems require an additional low pressure air test.

In some cases, hydrostatic testing (in accordance with the NFPA 13 requirements noted above) will result in pressures that exceed the working pressure of the valve and trim kit for the two-hour test period. **The valve and applicable trim kit have been tested, approved and listed under these conditions and as such, hydrostatic testing in accordance with NFPA 13 is acceptable. In addition, the clapper can remain in the closed position and the trim kit need not be isolated, as each has been designed to withstand hydrostatic testing as required by NFPA 13.**

Hydrostatically testing the valve and trim to pressures higher than their rating is limited to the hydrostatic test as referenced by NFPA 13. It does not address the occurrence(s) of a "water hammer" effect, which can indeed damage the valve. A "water hammer" in the water supply piping of the valve can create pressures in excess of the rated pressure and should be avoided by all necessary means. This condition may be created from improper fire pump settings, underground construction work, or an improper venting of trapped air in the water supply piping.

System Design Considerations

The automatic sprinklers, wet pilot line sprinklers/ detectors, and signaling devices which are utilized with the Wet Pilot Line Single Interlock Preaction System must be UL or ULC Listed, as applicable.

The automatic sprinklers, air compressor, releasing devices, electric releasing control equipment, fire detection devices, manual pull stations, and signaling devices which are utilized with the Electric Actuation Single Interlock Preaction System must be UL or ULC Listed or FM Approved, as applicable.

The automatic sprinklers, air compressor, releasing devices, electric releasing control equipment, fire detection devices, manual pull stations, and signaling devices which are utilized with the Dry Pilot Line Single Interlock Preaction System must be UL or ULC Listed, as applicable.

The Deluge Valve, and all interconnecting piping must be located in a readily visible and accessible location and in an area that can be maintained at a minimum temperature of 40°F (4°C). **Note:** Heat tracing is not permitted.

Pendent sprinklers, other than dry pendents, used on preaction systems shall be installed on return bends per NFPA 13.

In Electric Actuation Single Interlock Preaction Systems, the solenoid valve is operated and supervised by the electrical releasing/control panel.

In Wet Pilot Line Single Interlock Preaction Systems, the wet pilot line is only a detection system and does not contribute to controlling the fire. Its installation is subject to the following restrictions:

a. It is not to be installed in an area subject to freezing.
b. It is not to be installed in an area where temperatures in excess of 150°F (65°C) are anticipated.
c. NFPA 72 or the authority having jurisdiction should be consulted for spacing and elevation requirements.
d. Maximum wet pilot line length and height must comply with data provided in Fig. 2.

System Air Pressure Requirements

For Wet Pilot Single Interlock Preaction Systems and **Electric Actuation Single Interlock Preaction Systems**, a Reliable Model B-SI Air Compressor Panel or Reliable Model C-SI Air Compressor Panel can be used to maintain the system air pressure at approximately 7 psi (0.5 bar). The air compressor panels contain an integral low air pressure warning light.

In some circumstances, such as when dry sprinklers are being used in a preaction system, it may be desirable to supervise the preaction system at air pressures higher than 7 psi (0.5 bar). For such cases, Reliable recommends the use of a tank-mounted compressor and the Reliable Model A-2 Pressure Maintenance Device. Supervising pressure may be between 7 psi and 20 psi (0.5 and 1.4 bar).

For **Dry Pilot Line Single Interlock Preaction Systems**, a Reliable Model A-2 Pressure Maintenance Device can be used to maintain the pneumatic pressure of both the Dry Pilot Line of detectors and the fire sprinklers to the values shown in Table A. The values listed in the table represent the necessary ranges of pneumatic pressure required to keep the Model LP Dry Pilot Line Actuator in the closed position for a given water supply pressure.

Table A

Water Pressure psi (bar)	Pneumatic Pressure to be Pumped into Sprinkler System psi (bar)	
Maximum	Not Less Than	Not More Than
20 (1.4)	8 (0.6)	10 (.7)
30 (2.1)	10 (0.7)	14 (1.0)
50 (3.4)	12 (0.8)	16 (1.1)
75 (5.2)	13 (0.9)	17 (1.2)
100 (6.9)	15 (1.0)	19 (1.3)
125 (8.6)	16 (1.1)	20 (1.4)
150 (10.3)	17 (1.2)	21 (1.4)
175 (12.1)	18 (1.2)	22 (1.5)
200 (13.8)	19 (1.3)	23 (1.6)
225 (15.5)	21 (1.4)	25 (1.7)
250 (17.2)	22 (1.5)	26 (1.8)
275 (19.0)	23 (1.6)	27 (1.9)
300 (20.7)	24 (1.7)	28 (1.9)

Note: During system set-up, a higher pneumatic pressure may be required in order to properly set the Model LP Dry Pilot Line Actuator.

Whenever multiple systems area supplied by a common air or nitrogen source, each system must have its own pressure maintenance device for individual maintenance of pressure (NFPA 13, 7.2.6.5).

System Electrical Requirements

When Using the Electric Actuation Single Interlock Preaction System, all releasing, alarm and detection devices in the Single Interlock Preaction System are supervised by the Potter PFC-4410-RC Releasing Control Panel. Connect these devices as shown in Fig. 9. The Releasing/ Control Panel should be set to use Program #6 (See Potter Instruction Manual #5403550).

The power supply, the standby emergency power supply, battery charger, and the rectifier circuitry are all contained within the Potter PFC-4410-RC Releasing Control Panel. The solenoid valve is operated and supervised by the Potter PFC-4410-RC Releasing Control Panel. Potter PFC-4410-RC Releasing Control Panel requires 120 VAC. Batteries that provide ninety hours of standby power are required for Factory Mutual Approved systems.

Note:

In order for the solenoid valve to maintain Reliable's warranty it must remain sealed as it came from the factory. If there are concerns about the valve's internal components, immediate replacement is recommended.

Standard Solenoid Valve Specifications:

Skinner Model 73218BN4UNLVN0C111C2
Rated working pressure: 175 psi (12.1 bar)
Voltage: 24 VDC
Power: 10 Watts
Current: 0.41 Amps Holding
Enclosure Coil: NEMA 4X
Pipe Size: ½" NPT Female
Cv Factor: 4.0

Alternate Solenoid Valve Specifications:

Skinner Model 73212BN4TNLVN0C322C2
Rated working pressure: 300 psi (20.7 bar)
Voltage: 24 VDC
Power: 22 Watts
Current: 0.83 Amps Holding
Enclosure Coil: NEMA 4X
Pipe Size: ½" NPT Female
Cv Factor: 2.8

Single Interlock Preaction Systems Engineering Specification

2" (50 mm), 2½" (65 mm), 76 mm, 3" (80 mm), 4" (100 mm), 165 mm, 6" (150 mm) and 8" (200 mm)

Model DDX Deluge Valve

Preaction System shall be a Single Interlock Preaction System utilizing a [2" (50 mm)][2½" (65 mm)][76 mm] [3" (80 mm)][4" (100 mm)][165 mm][6" (150 mm][8" (200 mm)] [cULus Listed] [Factory Mutual Approved] hydraulically operated, differential latching clapper type valve. Deluge valve construction shall be of lightweight, ductile iron construction with either a "screw in" stainless steel seat and clapper assembly or drop in bronze seat and clapper assembly. Stainless steel or Bronze seat shall have O-ring seals to resist leakage and corrosion. Clapper facing shall be pressure actuated, providing a limited compression seat for the sealing force between the clapper rubber facing and the valve seat. Deluge valve shall have an external reset knob for resetting the clapper without requiring the removal of the valve face plate. Push-rod chamber design shall consist of a stainless steel piston/ push-rod and spring assembly with diaphragm seal secured to the casting through a push-rod guide constructed of a synthetic engineering plastic to resist corrosion. Casting shall have a bleeder hole located on the pushrod chamber for air/water leakage indication. Trip ratio shall be approximately a 3:1 force differential. Deluge valve shall be of the straight through design to minimize friction loss. Inlet restriction orifice shall be factory installed into the

SINGLE INTERLOCK PREACTION SYSTEM ELECTRICAL CONNECTIONS

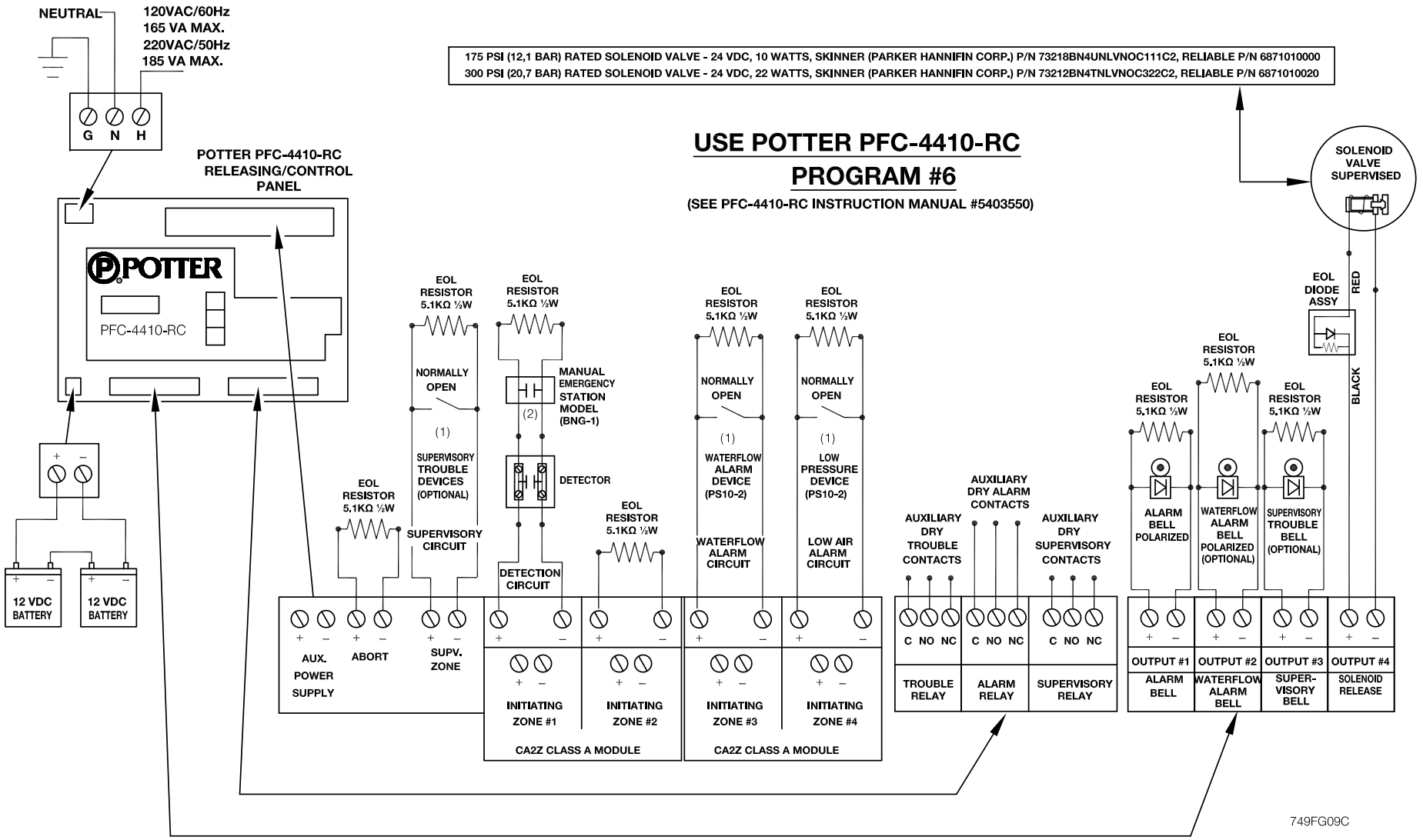

(1) EACH SWITCH MUST HAVE CONTACTS OPEN DURING THE NORMAL "SYSTEM READY" CONDITION.

(2) A MANUAL PULL STATION ON INITIATING ZONE #1 WILL ENERGIZE THE SOLENOID VALVE AND SOUND AN ALARM. USE THIS MANUAL PULL STATION TO SET UP SYSTEM.

Fig. 9

inlet port of the deluge valve push-rod cover plate and not be a separate part of the deluge valve trim. End connection style to be [2" (50 mm)][2½" (65 mm)][76 mm] [3" (80 mm)] [4" (100 mm)][165 mm][6" (150 mm][8" (200mm] grooved, per ANSI/AWWA C606 or flanged per ASME B16.5 or ISO 7005. Deluge valve shall have a rated working pressure of 250 psi (17.2 bar) for 2" (50mm), 2½" (65mm), 76mm, 3" (80mm) and 8" (200mm) valve sizes and 300 psi (20.7 bar) for 4" (100mm), 165mm and 6" (150mm) valve sizes and shall be factory hydrostatic tested at 500 psi (34.5 bar) for 2" (50mm), 2½" (65mm), 76mm, 3" (80mm) and 8" (200mm) valve sizes and 600 psi (41.4 bar) for 4" (100mm), 165mm and 6" (150mm) valve sizes.

Deluge valve to be [2" (50 mm)][2½" (65 mm)][76 mm] [3" (80 mm)][4" (100 mm)][165 mm][6" (150 mm][8" (200 mm)] Reliable Model DDX Deluge Valve (Bulletin 519).

Interlock Preaction Trims shall consist of either black pipe or galvanized pipe and brass components specifically listed/approved with the deluge valve.

In addition, the Electric Actuation Single Interlock Preaction Trim shall include a Deluge valve releasing device to be an electrical two-way, normally closed, pilot operated solenoid valve [cULus Listed] [FMApproved] for its intended use. The solenoid valve shall be constructed of a brass body with stainless steel sleeve tube, springs, stop and plunger, and with ½" female NPT end connections. Solenoid valve shall have a maximum working pressure of [175 psi (12.1 bar)] [300 psi (20.7 bar)] and maximum ambient temperature rating of 150°F (66°C). Power consumption of integrated coil shall be limited to [10 watts (175 psi (12.1 bar)) Rated]

[22 watts (300 psi (20.7 bar)) Rated] and require 24 VDC from a releasing/control panel listed for such service. Solenoid valve shall be a Skinner ½" normally-closed solenoid valve, [Model 73218BN4UNLVNOC111C2 (175 psi (12.1 bar)) Rated]. [Model 73212BN4TNLVNOC322C2 (300 PSI (20.7 bar)) Rated].

Dry Pilot Line Single Interlock Preaction Trim shall include a low pressure pneumatic actuator which is constructed of cast iron utilizing a diaphragm and compression spring design to separate the pushrod chamber water pressure from the system piping's pneumatic supervisory air pressure. The low-pressure actuator shall only require between 8 and 28 psi (0.6 and 1.9 bar) supervisory air pressure for proper setting in accordance with the manufacturers instructions. The Low-pressure actuator shall be Reliable Model LP Dry Pilot Line Actuator. The Dry Pilot Line Single Interlock Trim shall also include a low air pressure switch to indicate loss of air pressure in the system piping. The switch shall be [UL Listed/ FM Approved][cULus Listed] and of the bellows-activated type enclosed in a weatherproof NEMA 4X/ NEMA 4 rated enclosure incorporating tamper resistant screws. There shall be two sets of SPDT (form C) contacts rated 10.0 A @ 125/250 VAC and 2.5 A @ 6/12/24 VDC. The pressure switch shall have a maximum service pressure rating of 250 psi (17.2 bar). Switch shall be provided with a ½" NPT male pressure connection. Low air supervisory switch shall be Potter PS25-2.

Pneumatic Supervisory Pressure Supply Options

Owner's Air supply

Supervisory air supply shall be provided by an owner supplied air system in conjunction with a [cULus Listed] automatic pressure maintenance device, capable of maintaining a constant system pressure regardless of pressure fluctuations in the compressed air source. The pressure maintenance device shall consist of galvanized trim and brass parts, including a strainer and a field adjustable air pressure regulator, and have a working pressure rating of 175 psi (12.1 bar). The pressure regulator shall have an adjustable outlet pressure range of 5 to 100 psi (0.34 to 6.8 bar). Pressure maintenance device shall be Reliable Model A-2 (see NFPA13).

Low Pressure Air Compressor Panel

Wet Pilot Line Single Interlock Preaction and Electric Actuation Single Interlock Preaction system supervisory air supply shall be a [cULus Listed] [FM Approved] self-contained, low pressure air compressor panel containing a 1/16 hp air compressor, DPDT relay for remote supervisory annunciation, low pressure warning light, pressure gauge, and low pressure alarm switch. Pressure switch shall control the compressor, providing a maximum operating supervisory pressure of approximately 7 psi (0.5 bar), and a low-pressure supervisory alarm at approximately 4 psi (0.3 bar). Power requirements shall be 120 VAC/60 Hz or 220/230 VAC/50 HZ. Low Pressure Air Compressor Panel shall be Reliable Model B-SI or C-SI.

Compressed Air Supply

Supervisory air supply shall be provided by an automatic air compressor sized for the capacity (volume) of the single interlock preaction system piping, and be capable of restoring normal air pressure in the system within the time limits specified in NFPA 13.

Dry Pilot Line Single Interlock Preaction systems desiring a higher supervisory air pressure, shall only require between 8 and 28 psi (0.6 to 1.9 bar) supervisory pressure for proper setting of the low pressure pneumatic actuator in accordance with the manufacturer's instructions. Air supply shall be equipped with an automatic pressure maintenance device capable of maintaining a constant system pressure regardless of pressure fluctuations in the compressed air (or nitrogen) source, or system piping. The pressure maintenance device shall consist of galvanized trim and brass parts, including a strainer and a field adjustable air pressure regulator, or pressure switch, and have a working pressure rating of 175 psi (12.1 bar). The pressure regulator shall have an adjustable outlet pressure range of 5 to 100 psi (0.34 to 6.8 bar). Pressure maintenance device shall be Reliable Model A-2 or Reliable Model B-1. (Note: For small systems with air compressors having a capacity less than 5.5 cfm @ 10 psi, a pressure maintenance device is not required per NFPA 13. Consideration should be given, however, to the impact of a direct air supply on the overall performance of the system.)

Nitrogen

Nitrogen cylinders provided by an approved source shall provide the nitrogen supply. Dry Pilot Line Single Interlock Preaction System and Wet Pilot Ling Single Interlock or Electric Actuation Single Interlock Preaction systems desiring a higher supervisory air pressure, shall only require between 8 and 28 psi (0.6 to 1.9 bar) supervisory pressure for proper setting of the low pressure pneumatic actuator in accordance with the manufacturer's instructions. The nitrogen cylinder pressure shall be regulated and supervised through the use of nitrogen regulating device and low-pressure trim kit. This device shall consist of a brass, single stage pressure regulator, equipped with high pressure inlet and low pressure outlet gauges, and ¼" copper connection tubing with galvanized ¾" x ¼" reducer bushing. Optional: Low-pressure trim kit shall be included to monitor the regulated nitrogen supply pressure to provide a low-pressure supervisory alarm. This kit shall include a low-pressure switch with associated galvanized connection trim. Assembly shall be a Reliable Nitrogen Regulating Device. This device is to be used in conjunction with the Reliable Model A-2 Pressure Maintenance Device.

Optional System Accessories

System Control Valve

Preaction system control valve shall be a slow close, [cULus Listed] indicating butterfly type valve with a pre-wired supervisory tamper switch assembly. The valve shall be rated for a working pressure of [300 psi (20.7 bar)]. System control valve shall be for a [2" (50 mm)] Gruvlock AN7722-3A Butterfly Valve or [2½" (65 mm)][3" (80 mm)][4" (100 mm)][6" (150 mm][8" (200 mm] - Nibco GD-4765-8N Butterfly Valve.

Waterflow Alarm Pressure Switch

Alarm pressure switch shall be provided to indicate water flow and provide a water flow alarm. Pressure switch shall be [cULus Listed] and of the bellows activated type enclosed in a weatherproof, 4x, NEMA 4-rated enclosure incorporating tamper-resistant screws. There shall be two sets of SPDT (Form C) contacts rated at 10.0 A @ 125/250 VAC and 2.5 A @ 6/12/24 VDC. The pressure switch shall have a maximum service pressure rating of 250 psi (17.2 bar) and shall be factory adjusted to operate at a pressure of 4 to 8 psi (0.27 to 0.55 bar) with adjustment up to 15 psi (1.03 bar). Switch shall be provided with a 1/2" NPT male pressure connection. Waterflow alarm pressure switch shall be Potter PS10-2.

Detection System

To operate the solenoid valve on the electric actuation preaction system, a supplemental electric detection system shall be provided [Insert applicable product specification].

Releasing/Control Panel

A releasing/control panel shall be used to operate the preaction system. The releasing/control panel shall be a conventional, microprocessor-controlled panel containing two initiating device circuits, and waterflow and supervisory inputs. Output circuits shall include alarm, waterflow, supervisory, and releasing circuits. The releasing/control panel shall be capable of providing any of the following desired modes of operation: single hazard, two zone; single hazard, cross-zoned; dual hazard, combined release; and dual hazard, split release (two area). Releasing/control panel shall be equipped with a local tone alarm to annunciate loss of AC power, system trouble, circuit trouble, and low auxiliary DC power supply. Panel shall be [cULus Listed] [FM Approved] and be capable of providing power for compatible detectors and auxiliary devices used. Audible alarms shall be able to be silenced at releasing panel. Auxiliary DC power supply shall consist of (2) 12-volt lead acid batteries of the same ampere-hour rating, providing [60 hours – cULus Listed] [90 hours – FM Approved]. Dry contacts shall be provided for remote annunciation of alarm, trouble, and supervisory panel signals. Main power supply to be a dedicated a 120 VAC / 60 Hz circuit.

Technical Data

Reliable Single Interlock Preaction Systems, with associated trim, size 2" (50 mm), 2½" (65 mm), 76 mm, 3" (80 mm), 4" (100 mm), 165 mm, 6" (150 mm) & 8" (200 mm) are rated for use at minimum water supply pressure of 20 psi (1.4 bar) and maximum supply pressure of 250 psi (17.2 bar) for 2" (50mm), 2½" (65mm), 76mm, 3" (80mm) and 8" (200mm) valve sizes and 300 psi (20.7 bar) for 4" (100mm), 165mm and 6" (150mm) valve sizes. Water supplied to the inlet of the valve and to the pushrod chamber must be maintained between 40°F (4°C) and 140°F (60°C).

The following list of technical bulletins pertains to valves and devices that may be used in this preaction system:

Deluge Valve	Reliable 518/519
Hydraulic Emergency Station (Model A)	Reliable 506
Solenoid Valve	Reliable 718
Mechanical Sprinkler Alarm	Reliable 612/613
Pressure Maintenance Device	Reliable 254
Nitrogen Regulating Device	Reliable 254
Air Compressor Panel (Models B-SI & C-SI)	Reliable 254
Releasing/Control Panel	Potter #5403550
Pilot Line Detector	Reliable 180
Waterflow Pressure Alarm Switch	Potter 5400928

Model DDX Deluge Valve Description

1. Rated working pressure:
   Valve & System - 250 psi (17.2 bar) for 2" (50mm), 2½" (65mm), 76mm, 3" (80mm) and 8" (200mm) valve sizes and 300 psi (20.7 bar) for 4" (100mm), 165mm and 6" (150mm) valve sizes.
2. Factory tested to a hydrostatic pressure of 500 psi (34.5 bar) for 2" (50mm), 2½" (65mm), 76mm, 3" (80mm) and 8" (200mm) valve sizes and 600 psi (41.4 bar) for 4" (100mm), 165mm and 6" (150mm) valve sizes. (Valve only)

3. End and trim connections:

- ANSI/AWWA C606 grooved inlet and outlet

Nominal Pipe Size	Outlet Diameter	Groove Diameter	Groove Width	Outlet Face to Groove
2" (50 mm)	2.375" (60mm)	2.250" (57mm)	11/32" (9.0mm)	5/8" (16mm)
2½" (65 mm)	2.875" (73mm)	2.720" (69mm)	11/32" (9.0mm)	5/8" (16mm)
76 mm	3.000" (76mm)	2.845" (72mm)	11/32" (9.0mm)	5/8" (16mm)
3" (80 mm)	3.500" (89mm)	3.344" (85mm)	11/32" (9.0mm)	5/8" (16mm)
4" (100 mm)	4.500" (114mm)	4.334" (110mm)	3/8" (9.5mm)	5/8" (16mm)
165 mm	6.500" (165mm)	6.330" (161mm)	3/8" (9.5mm)	5/8" (16mm)
6" (150 mm)	6.625" (168mm)	6.455" (164mm)	3/8" (9.5mm)	5/8" (16mm)
8" (200 mm)	8.625" (219mm)	8.441" (214mm)	7/16" (11mm)	3/4" (19mm)

- Threaded openings Per ANSI B 2.1
- Flange Dimensions

Flange Type:	Nominal Pipe Size	Bolt Circle Diameter	Bolt Hole Diameter	Flange Outside Diameter	Flange Thickness	Number of Bolts
ASME B16.5 Class 150	4" (100mm)	7½" (191mm)	¾" (19mm)	9" (229mm)	15/16" (24mm)	8
ISO 7005-2 PN16	4" (100mm)	7 3/32" (180mm)	¾" (19mm)	9" (229mm)	15/16" (24mm)	8
ASME B16.5 Class 150	6" (150mm)	9½" (241mm)	7/8" (22mm)	11" (279mm)	15/16" (24mm)	8
ISO 7005-2 PN16	6" (150mm)	9 7/16" (240mm)	29/32" (23mm)	11" (279mm)	15/16" (24mm)	8
ASME B16.5 Class 150	8" (200mm)	11¾" (298mm)	7/8" (22mm)	13½" (343mm)	1" (25.4mm)	8
ISO 7005-2 PN16	8" (200mm)	11 5/8" (295mm)	29/32" (23mm)	13½" (343mm)	1" (25.4mm)	12

4. Valve Exterior's Color:

Valve Size	Color
2" (50 mm)	Black or Red
2½" (65 mm)	Black or Red
76 mm	Red
3" (80 mm)	Black or Red
4" (100 mm)	Black or Red
165 mm	Red
6" (150 mm)	Black or Red
8" (200 mm)	Black or Red

5. Face to face dimensions:

Valve Size:	End Connection:	End to End:
2" (50mm), 2½" (65mm), 76mm & 3" (80mm)	Groove/ Groove	12½" (318mm)
4" (100mm)	Groove/ Groove	14" (356mm)
	Flange/ Groove	16" (406mm)
	Flange/ Flange	16" (406mm)
6" (150mm) & 165mm	Groove/ Groove	16" (406mm)
	Flange/ Groove	19" (483mm)
	Flange/ Flange	19" (483mm)
8" (200mm)	Groove/ Groove	19 3/8" (492mm)
	Flange/ Flange	21¼" (540mm)

6. Valve Shipping Weight:

Valve Size:	End Connection:	Weight:
2" (50mm), 2½" (65mm), 76mm & 3" (80mm)	Groove/ Groove	34 lbs (15 kg)
4" (100mm)	Groove/ Groove	64 lbs (29 kg
	Flange/ Groove	79 lbs (36 kg)
	Flange/ Flange	92 lbs (42 kg)
6" (150mm) & 165mm	Groove/ Groove	95 lbs (43 kg)
	Flange/ Groove	122 lbs (56 kg)
	Flange/ Flange	138 lbs (69 kg)
8" (200mm)	Groove/ Groove	148 lbs (67 kg)
	Flange/ Flange	197 lbs (90 kg)

7. Trim Shipping Weight:

Trim Configuration	2" (50 mm), 2½" (65 mm), 3" (80 mm) & 76 mm	4" (100 mm), 6" (150 mm), 8" (200 mm) & 165 mm
Wet Pilot Single Interlock	32 lbs (15 kg)	38 lbs (17 kg)
Dry Pilot Single Interlock	45 lbs (20 kg)	52 lbs (24 kg)
Electric Actuation Single Interlock	35 lbs (16 kg)	40 lbs (18 kg)

8. Friction loss (Expressed in equivalent length of Schedule 40 pipe, based on Hazen & Williams formula:

Valve Size:	Equivalent Length:		Cv
	C = 120	C = 100	
2" (50mm)	4.4 ft (1,3 m)	3.1 ft (1,0 m)	101
2½" (65mm)	6.0 ft (1,8 m)	4.3 ft (1,3 m)	236
76mm	7.7 ft (2,3 m)	5.5 ft (1,7 m)	241
3" (80mm)	12.6 ft (3,8 m)	9.0 ft (2,7 m)	254
4" (100mm)	14 ft (4,3 m)	10 ft (3,0 m)	469
165mm	29.4 ft (9,0 m)	20.9 ft (6,4 m)	886
6" (150mm)	29.4 ft (9,0 m)	20.9 ft (6,4 m)	886
8" (200mm)	53.5 ft (16,3 m)	38.1 ft (11,6 m)	1516

9. Installation position: Vertical

Trim Descriptions

The Single Interlock Preaction Trims for the Reliable Model DDX Deluge Valve are arranged for rapid, easy, and compact attachment, and serve as connection points to Reliable Model C Mechanical Alarms and other devices.

The available Model DDX Single Interlock Preaction System trim sets are:

- Wet Pilot Line Single Interlock Preaction Trim
- Dry Pilot Line Single Interlock Preaction Trim
- Electric Actuation Single Interlock Preaction Trim

All three trim configurations can be ordered as individual parts, in time-saving segmentally assembled kit forms, or fully assembled to the Model DDX Deluge Valve (with or without a control valve).

The Model B Hydraulic Manual Emergency Station (see Fig. 12) is a standard item of all Deluge Valve trim sets. It consists of an aluminum nameplate mechanically attached to a ball valve. The valve handle in its OFF position is guarded against accidental turning to the ON position (and system discharge) by a nylon cable tie provided with each trim kit. The cable tie is inserted, as shown in Fig. 12, after the system has been restored for operation. The nylon cable tie is designed to allow, in case of an emergency, forceful turning of the valve handle to the ON position. As an alternative to the Model B Hydraulic Manual Emergency Station, the Model A Hydraulic Manual Emergency Pull Box (see Bulletin 506) is also available and can be provided as an option.

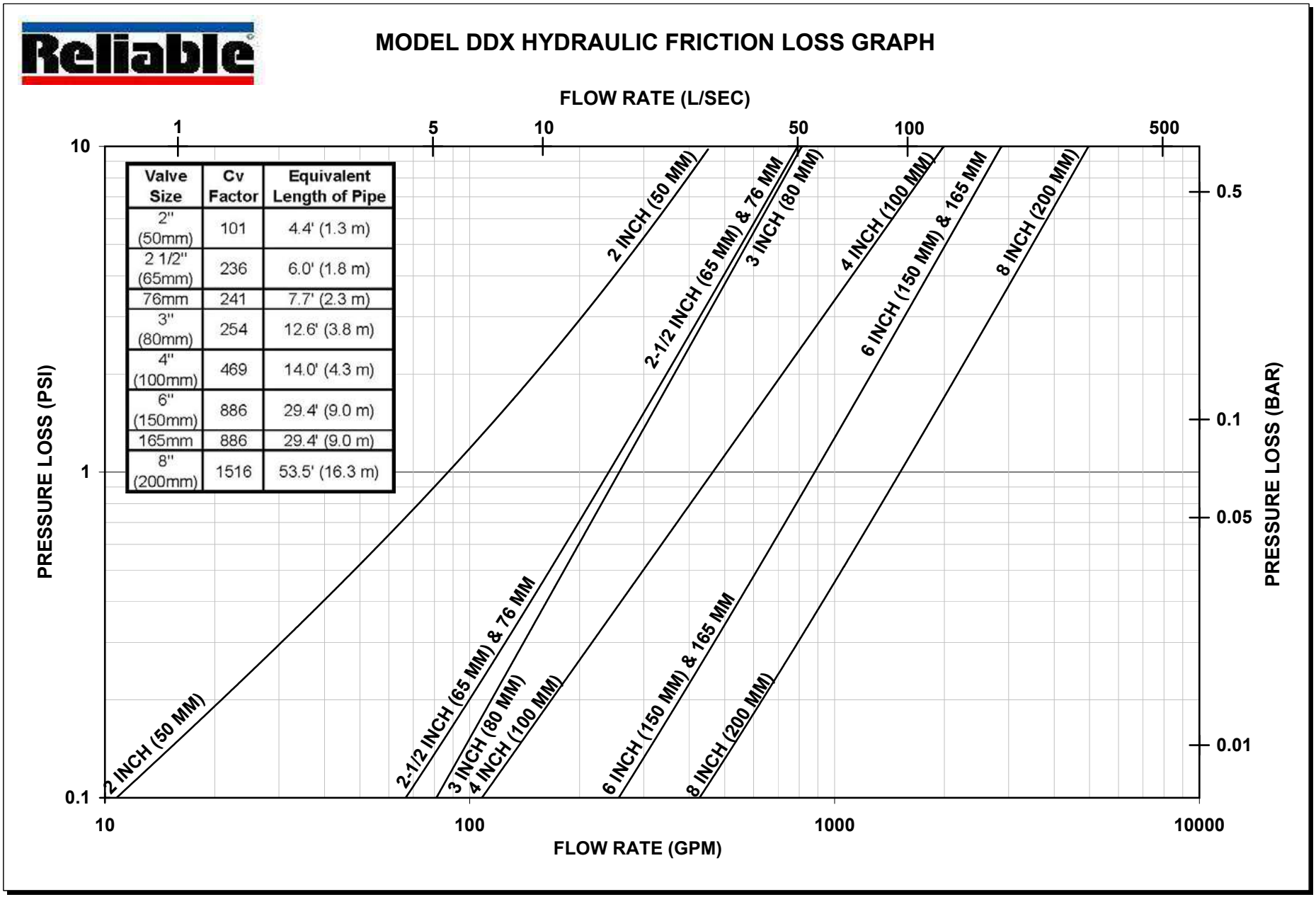

Valve Size	Cv Factor	Equivalent Length of Pipe
2" (50mm)	101	4.4' (1.3 m)
2 1/2" (65mm)	236	6.0' (1.8 m)
76mm	241	7.7' (2.3 m)
3" (80mm)	254	12.6' (3.8 m)
4" (100mm)	469	14.0' (4.3 m)
6" (150mm)	886	29.4' (9.0 m)
165mm	886	29.4' (9.0 m)
8" (200mm)	1516	53.5' (16.3 m)

Fig. 10

Model F1-FTR fixed temperature pilot line detectors and spacing requirements are described in Bulletin 180.

Maintenance

Reliable Single Interlock Preaction Systems and associated equipment shall periodically be given a thorough inspection and test. NFPA 25, Inspection, Testing and Maintenance of Water Based Fire Protection Systems, provides minimum maintenance requirements. System components shall be tested, operated, cleaned, and inspected at least annually, and parts replaced as required.

Wet Pilot Line Single Interlock Preaction Trim

Wet pilot line single interlock preaction trim operation is a simple method of Deluge Valve Actuation. The trim contains components such as a one and one quarter main drain on 2" (50 mm), 2½" (65 mm), 76 mm and 3" (80 mm) valve sizes or a two inch main drain on 4" (100 mm), 165 mm, 6" (150 mm) and 8" (200 mm) valve sizes, alarm test, supply and push rod chamber pressure gauges, and push rod chamber connections. The wet pilot line consists of a line of closed detectors (Model F1-FTR) located over the area to be protected. This line contains water under pressure and is connected to the outlet of the push rod chamber of the Deluge Valve. When one of the pilot line detectors actuates, the push rod chamber is vented and the Deluge Valve operates. The Deluge Valve can also be operated manually by opening the ball valve of the Model B Hydraulic Manual Emergency Station (see Fig. 12) or the optional Model A Hydraulic Manual Emergency Pull Box (see Reliable Bulletin 506).

The wet pilot line is only a detection system and does not contribute to controlling the fire. Its installation is subject to the following restrictions:

a) It is not to be installed in an area subject to freezing.
b) It is not to be installed in an area where temperatures in excess of 150°F (65°C) are anticipated.
c) NFPA 72 or the authority having jurisdiction should be consulted for spacing and elevation requirements.
d) Maximum wet pilot line length and height must comply with data provided in Fig. 2.

Wet Pilot Trim installation on Model DDX Deluge Valves uses eight tapped openings for trim connections. Each opening and its function are indicated on Fig. 3 or Fig. 4. Using Fig. 3 or Fig. 4 as reference, the recommended trim installation is as follows:

1. Install ½" nipple (#35, Fig. 3 or #37, Fig. 4) in the tapped opening marked "TEST". **Note: If interference occurs between the supply gauge and the control valve, the 1/4" plug (#52, Fig. 3 or #52, Fig. 4) in the opening marked "SUPPLY" may be swapped with: the 1/4" nipple (#33, Fig. 3), angle valve (#9, Fig. 3) and gauge (#67, Fig. 3) for the 2" (50mm), 2-1/2" (65mm), 76mm and 3" (80mm) valve sizes; 1/4" nipple (#32, Fig. 4), 1/4" elbow (#23, Fig. 4), 1/4" nipple (#33, Fig. 4), 3-way valve (#64, Fig. 4) and the gauge (#66, Fig. 4) for the 4" (100mm), 165mm and 6" (150mm) valve sizes; 1/4" nipple (#33, Fig. 4), 3-way valve (#64, Fig. 4) and the gauge (#66, Fig. 4) for the 8" (200mm) valve size, in the trim installed in the opening marked "TEST".**
2. Install ½" nipple (#38, Fig. 3 or #34, Fig. 4) in the tapped opening marked "ALARM" and connect balance of this trim line.
3. Install ¼" plug (#52, Fig. 3 or #52, Fig. 4) in the tapped opening marked "SUPPLY." **Note: If interference occurs between the supply gauge and the control valve, the 1/4" plug (#52, Fig. 3 or #52, Fig. 4) in the opening marked "SUPPLY" may be swapped with: the 1/4" nipple (#33, Fig. 3), angle valve (#9, Fig. 3) and gauge (#67, Fig. 3) for the 2" (50mm), 2-1/2" (65mm), 76mm and 3" (80mm) valve sizes; 1/4" nipple (#32, Fig. 4), 1/4" elbow (#23, Fig. 4), 1/4" nipple (#33, Fig. 4), 3-way valve (#64, Fig. 4) and the gauge (#66, Fig. 4) for the 4" (100mm), 165mm and 6" (150mm) valve sizes; 1/4" nipple (#33, Fig. 4), 3-way valve (#64, Fig. 4) and the gauge (#66, Fig. 4) for the 8" (200mm) valve size, in the trim installed in the opening marked "TEST".**
4. Install ½" nipple (#34, Fig. 3 or #34, Fig. 4) in the tapped opening marked "OUT" and connect balance of this trim line.
5. Install ¼" inline check valve (#15, Fig. 3 or #14, Fig. 4) in the tapped opening marked "IN" and connect balance of this trim line. **Caution:** Over tightening check valve can cause a restriction in flow that may prevent the valve from "setting up".
6. Install 1¼" Nipple (#44, Fig. 3) or 2" nipple (#44, Fig. 4) in the tapped drain opening and connect balance of this trim line.
7. Install ¾ x ¼ reducing coupling (#48, Fig. 3 or #48, Fig. 4) in the lower-most tapped opening at the rear of the Deluge Valve and connect the balance of this trim line.
8. Install ¾" nipple (#40, Fig. 3 or #39, Fig. 4) in the upper-most tapped opening at the rear of the Deluge Valve and connect the balance of this trim line.

Electric Actuation Single Interlock Preaction Trim

Electric Actuation trim (see Figures 5 and 6) combines a normally closed/powered-open solenoid valve with the Wet Pilot Line Single Interlock Preaction Trim for releasing the Deluge Valve. The solenoid valve used in the assembly is available in either a 175 psi (12.1 bar) or 300 psi (20.7 bar) rating.

Note:

In order for the solenoid valve to maintain Reliable's warranty it must remain sealed as it came from the factory. If there are concerns about the valve's internal components, immediate replacement is recommended.

Electric Actuation Trim installation on Model DDX Deluge Valves uses eight tapped openings for trim connections. Each opening and its function are indicated on Fig. 5 or Fig. 6. Using Fig. 5 or Fig. 6 as reference, the recommended trim installation is as follows:

1. Install ½" nipple (#37, Fig. 5 or #39, Fig. 6) in tapped opening marked "TEST." **Note: If interference occurs between the supply gauge and the control valve, the 1/4" plug (#54, Fig. 5 or #54, Fig. 6) in the opening marked "SUPPLY" may be swapped with: the**

1/4" nipple (#35, Fig. 5), angle valve (#10, Fig. 5) and gauge (#69, Fig. 5) for the 2" (50mm), 2-1/2" (65mm), 76mm and 3" (80mm) valve sizes; 1/4" nipple (#34, Fig. 6), 1/4" elbow (#25, Fig. 6), 1/4" nipple (#35, Fig. 6), 3-way valve (#66, Fig. 6) and the gauge (#68, Fig. 6) for the 4" (100mm), 165mm and 6" (150mm) valve sizes; 1/4" nipple (#35, Fig. 6), 3-way valve (#66, Fig. 6) and the gauge (#68, Fig. 6) for the 8" (200mm) valve size, in the trim installed in the opening marked "TEST".

2. Install ½" nipple (#40, Fig. 5 or #36, Fig. 6) in tapped opening marked "ALARM" and connect balance of this trim line.
3. Install ¼" plug (#54, Fig. 5 or #54, Fig. 6) in tapped opening marked "SUPPLY." **Note: If interference occurs between the supply gauge and the control valve, the 1/4" plug (#54, Fig. 5 or #54, Fig. 6) in the opening marked "SUPPLY" may be swapped with: the 1/4" nipple (#35, Fig. 5), angle valve (#10, Fig. 5) and gauge (#69, Fig. 5) for the 2" (50mm), 2-1/2" (65mm), 76mm and 3" (80mm) valve sizes; 1/4" nipple (#34, Fig. 6), 1/4" elbow (#25, Fig. 6), 1/4" nipple (#35, Fig. 6), 3-way valve (#66, Fig. 6) and the gauge (#68, Fig. 6) for the 4" (100mm), 165mm and 6" (150mm) valve sizes; 1/4" nipple (#35, Fig. 6), 3-way valve (#66, Fig. 6) and the gauge (#68, Fig. 6) for the 8" (200mm) valve size, in the trim installed in the opening marked.**
4. Install ½" nipple (#36, Fig. 5 or #36, Fig. 6) in tapped opening marked "OUT" and connect balance of this trim line.
5. Install ¼" inline check valve (#16, Fig. 5 or #15, Fig. 6) in tapped opening marked "IN" and connect balance of this trim line. Supply line must be connected to the inlet of the control valve for each Deluge Valve as shown. **Caution:** Over tightening check valve can cause a restriction in flow that may prevent the valve from "setting up".
6. Install 1¼" Nipple (#46, Fig. 5) or 2" nipple (#46, Fig. 6) in tapped drain opening and connect balance of this trim line.
7. Install ¾" x ¼" reducing bushing (#50, Fig. 5 or #50, Fig. 6) in the lower-most tapped opening at the rear of the Deluge Valve and connect the balance of this trim line.
8. Install ¾" nipple (#42, Fig. 5 or #41, Fig. 6) in the upper-most tapped opening at the rear of the Deluge Valve and connect the balance of this trim line.

Dry Pilot Line Single Interlock Preaction Trim

Dry pilot line single interlock preaction trim is used in water sensitive areas which are subject to freezing conditions or to obtain installed sprinkler heights and pipe lengths greater than allowed for wet pilot line trim.

Dry pilot operation uses a pilot line of closed sprinklers (Model F1-FTR) containing air under pressure located in the area to be protected. This pressurized line is connected to a Model LP Dry Pilot Line Actuator. The dry pilot line actuator functions very much like a miniature dry pipe valve. In areas where moisture-laden air could cause freezing or other problems in the dry pilot line, the use of a cylinder of dry compressed gas such as nitrogen is suggested. Approved gas handling regulators and connections are then recommended. When one of the closed sprinklers on the dry pilot line actuates, the air pressure is reduced, thus opening the Model LP Dry Pilot Line Actuator, which releases the Deluge Valve. NFPA 72 or the Authority Having Jurisdiction should be consulted for spacing and elevation requirements of the pilot line sprinklers.

The Dry Pilot Line Trim, shown in Figures 7 and 8, includes gauges to read the air and water pressure, a low air pressure switch, a pressure relief valve, a Model LP Dry Pilot Line Actuator, and connections for the dry pilot line of detectors.

Dry Pilot Line Trim installation on Model DDX Deluge Valves uses eight tapped openings for trim connections. Each opening and its function are indicated on Fig. 7 and Fig. 8. Using Fig. 7 and Fig. 8 as reference, the recommended trim installation is as follows:

1. Install ½" nipple (#39, Fig. 7 or #41, Fig. 8) in tapped opening marked "TEST". **Note: If interference occurs between the supply gauge and the control valve, the 1/4" plug (#58, Fig. 7 or #58, Fig. 8) in the opening marked "SUPPLY" may be swapped with: the 1/4" nipple (#37, Fig. 7), angle valve (#11, Fig. 7) and gauge (#73, Fig. 7) for the 2" (50mm), 2-1/2" (65mm), 76mm and 3" (80mm) valve sizes; 1/4" nipple (#36, Fig. 8), 1/4" elbow (#27, Fig. 8), 1/4" nipple (#37, Fig. 8), 3-way valve (#70, Fig. 8) and the gauge (#72, Fig. 8) for the 4" (100mm), 165mm and 6" (150mm) valve sizes; 1/4" nipple (#37, Fig. 8), 3-way valve (#70, Fig. 8) and the gauge (#72, Fig. 8) for the 8" (200mm) valve size, in the trim installed in the opening marked "TEST".**
2. Install ½" nipple (#42, Fig. 7 or #38, Fig. 8) in tapped opening marked "ALARM" and connect balance of this trim line.
3. Install ¼" plug (#58, Fig. 7 or #58, Fig. 8) in tapped opening marked "SUPPLY." **Note: If interference occurs between the supply gauge and the control valve, the 1/4" plug (#58, Fig. 7 or #58, Fig. 8) in the opening marked "SUPPLY" may be swapped with: the 1/4" nipple (#37, Fig. 7), angle valve (#11, Fig. 7) and gauge (#73, Fig. 7) for the 2" (50mm), 2-1/2" (65mm), 76mm and 3" (80mm) valve sizes; 1/4" nipple (#36, Fig. 8), 1/4" elbow (#27, Fig. 8), 1/4" nipple (#37, Fig. 8), 3-way valve (#70, Fig. 8) and the gauge (#72, Fig. 8) for the 4" (100mm), 165mm and 6" (150mm) valve sizes; 1/4" nipple (#37, Fig. 8), 3-way valve (#70, Fig. 8) and the gauge (#72, Fig. 8) for the 8" (200mm) valve size, in the trim installed in the opening marked "TEST".**
4. Install ½" nipple (#38, Fig. 7 or #38, Fig. 8) in tapped opening marked "OUT" and connect balance of this trim line.
5. Install ¼" inline check valve (#17, Fig. 7 or #16, Fig. 8) in tapped opening marked "IN" and connect balance of this trim line. **Caution:** Over tightening check valve can cause a restriction in flow that may prevent the valve from "setting up".
6. Install 1¼" Nipple (#48, Fig. 7) or 2" nipple (#48, Fig. 8) in tapped drain opening and connect balance of this trim line.
7. Install ¾" x ¼" reducing bushing (#53, Fig. 7 or #53, Fig. 8) in the lower-most tapped opening at the rear of the Deluge Valve and connect the balance of this trim line.

8. Install ¾" nipple (#44, Fig. 7 or #43, Fig. 8) in the uppermost tapped opening at the rear of the Deluge Valve and connect the balance of this trim line.

Connect the air supply to the air inlet side of the Model LP Dry Pilot Line Actuator as shown in Fig. 7 or Fig. 8. Table A specifies the air pressure to be used in a dry pilot line. The level of air pressure is adjusted by removing the cap nut on the end of the Relief Valve (#56, Fig. 7 or #56, Fig. 8) and turning the now exposed slotted adjusting screw clockwise to increase pressure or counterclockwise to reduce it. Replace the cap nut after the correct pressure setting has been made at 5 psi above the maximum pilot line pressure required by Table A. An appropriate automatic pressure maintenance device must be used to safeguard against the Deluge Valve tripping due to air pressure leaks in the dry pilot line. See Bulletin 254 for pressure maintenance device information.

Install the dry pilot line as required. Wire the low air pressure switch (#5, Fig. 7 or #5, Fig. 8) to an annunciating device or control panel. This low air pressure switch should be set to open at an air pressure which is slightly lower than the "Not Less Than" values found in Table A.

Table A

Water Pressure psi (bar)	Pneumatic Pressure to be Pumped into Sprinkler System psi (bar)	
Maximum	Not Les Than	Not More Than
20 (1.4)	8 (0.6)	10 (0.7)
30 (2.1)	10 (0.7)	14 (1.0)
50 (3.4)	12 (0.8)	16 (1.1)
75 (5.2)	13 (0.9)	17 (1.2)
100 (6.9)	15 (1.0)	19 (1.3)
125 (8.6)	16 (1.1)	20 (1.4)
150 (10.3)	17 (1.2)	21 (1.4)
175 (12.1)	18 (1.2)	22 (1.5)
200 (13.8)	19 (1.3)	23 (1.6)
225 (15.5)	21 (1.4)	25 (1.7)
250 (17.2)	22 (1.5)	26 (1.8)
275 (19.0)	23 (1.6)	27 (1.9)
300 (20.7)	24 (1.7)	28 (1.9)

Note: During system set-up, a higher pneumatic pressure may be required in order to properly set the Model LP Dry Pilot Line Actuator.

Model LP Dry Pilot Line Actuator Parts List
P/N 71030010

Item No.	Part No.	Description	Qty. Required
1	94106936	Lower Housing	1
2	94106935	Upper Housing	1
3	96006905	Seat	1
4	92206312	Diaphragm	1
5	95106911	Facing Plate Assembly	1
6	96906311	Diaphragm Washer	1
7	94906406	Facing Plate Nut	1
8	95406901	Seat O-Ring	1
9	95606305	Bolt	6
10	96406902	Compression Spring	1

Maintenance – Model LP Dry Pilot Line Actuator

Refer to Figs. 11 & 15

If water constantly flows through the Model LP Dry Pilot Line Actuator and into the drain, there is a leak in the seal of the Actuator's seat.

1. Close the main valve controlling water supply (Fig. 15) to the Dry Pipe Valve and close off the air/nitrogen supply to the sprinkler system. Close valve A (Fig. 15).
2. Drop pressure in the system by opening the ¼" globe valve, valve E (Fig. 15), and remove the Actuator from the system.
3. Remove all six bolts (#9, Fig. 11) holding the Actuator together. Clean or replace the facing plate assembly (#5, Fig. 11) and seat (#3, Fig. 11).
4. Reassemble the Actuator, using a torque of 8 ft-lbs on the facing plate nut (#7, Fig. 11) and 12 ft-lbs on the six bolts (#9, Fig. 11). Use a cross-tightening pattern. Reinstall the Actuator. Set up the Model DDX Deluge Valve as per the section "Resetting Model DDX Deluge Valve System".

Resetting Model DDX Deluge Valve Single Interlock Preaction Systems

Refer to Figs. 7, 8, 13, 14 & 15.

1. Close the valve controlling water supply (Fig. 15) to the Deluge Valve and close off the air supply to the sprinkler system.
2. Close the pushrod chamber supply valve, valve A (Fig. 15).
3. Open main drain valve B (Fig. 15) and drain system.
4. Open all drain valves and vents at low points throughout the system, closing them when flow of water has stopped. Open valve D (Fig. 15). **Note:** The above steps accomplish the relieving of pressure in the pushrod chamber of the Deluge Valve.
5. With valve F (Fig. 15) open, push in the plunger of ball drip valve G (Fig. 15), forcing the ball from its seat, and drain the alarm line.
6. With the Model B Manual Emergency Station, valve D (Fig. 15) open, push in and rotate the Deluge Valve's external reset knob (#14, Fig. 13 or #38, Fig. 14) clockwise, until you hear a distinct noise indicating that the clapper has reset. **Note:** The reset knob can be rotated only while pressure in the pushrod chamber is vented to atmospheric conditions (0 psig).
7. Inspect and replace any portion of the detection system and/or sprinkler system subjected to fire conditions.
8. Open valve A (Fig. 15) and allow water to fill the push rod chamber. Close valve D (Fig. 15).
9. Bleed all air from the actuation piping.
   A. Wet Pilot Line Single Interlock Preaction Trim—bleed the entire wet pilot line until all air is removed at the most remote sprinkler.
   B. Electric Actuation Single Interlock Preaction Trim—open the solenoid valve by operating a detector or an electric manual emergency station. While water is flowing through the solenoid valve, cause it to close using the release control panel reset.

MODEL LP DRY PILOT LINE ACTUATOR

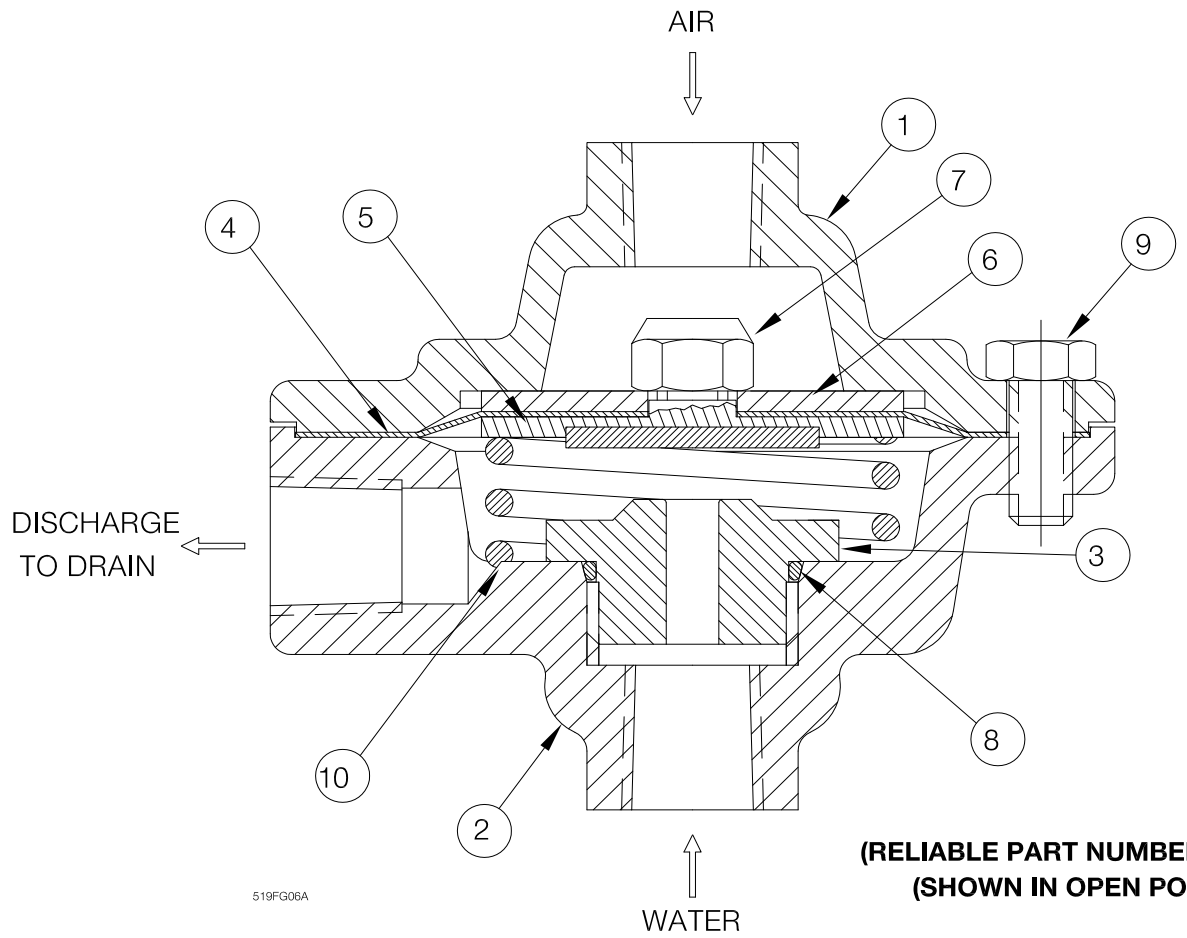

(RELIABLE PART NUMBER 71030010)
(SHOWN IN OPEN POSITION)

Fig. 11

MODEL B HYDRAULIC MANUAL EMERGENCY STATION

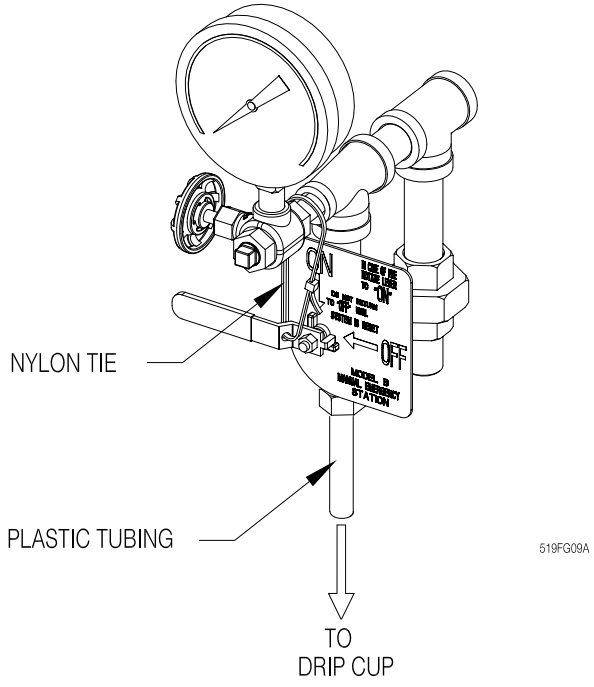

Fig. 12

C. Dry Pilot Line Single Interlock Preaction Trim—open valve D (Fig. 15) allowing water to flow through the pilot line actuator. When all air has been expelled from the release line, and there is a solid flow of water into the drain cup H (Fig. 15), apply compressed air or nitrogen through the pressure maintenance device to close the pilot line actuator. Subsequently, close valve D (Fig. 15) or (#7, Fig. 7 or #7, Fig. 8) and adjust the air or nitrogen pressure to the appropriate value in Table A as indicated on air pressure gauge (#72, Fig. 7 or #71, Fig. 8).

10. Close valve F (Fig. 15). Open the valve to restore air pressure in the sprinkler system. **Note: To build supervisory air pressure in the sprinkler system, it may be necessary to temporarily close the main drain valve, valve B until air pressure has built up to the manufacturers recommended levels.**
11. Open valve F (Fig. 15). Verify the main drain valve, valve B is open. Open slightly the main valve controlling water supply (Fig. 15) to the Model DDX Deluge Valve, closing drain valve B (Fig. 15) when water flows. Observe if water leaks through the ball drip valve, valve G (Fig. 15), into the drip cup, H (Fig. 15). If no leak occurs, the Deluge Valve's clapper is sealed. Open slowly and verify the main valve controlling water supply is fully opened and properly monitored.
12. Verify that valve A (Fig. 15) and valve F (Fig. 15) are open. **Valve A (Fig. 15) must remain open when the Deluge Valve has been reset, to maintain water pressure in the push rod chamber.**
13. Verify that the Model B Manual Emergency Station, valve D (Fig. 15) is secured in the OFF position with the appropriate nylon tie (#57, Fig. 7 or #57, Fig. 8) see Fig. 12.

Inspection and Testing

Refer to Figs. 13, 14 & 15.

1. **Water supply** — be sure the valves controlling water supply to the Deluge Valve are opened fully and properly monitored.
2. **Alarm line** — be sure that valve F (Fig. 15) is opened and remains in this position.
3. **Other trimming valves** — check that valve A (Fig. 15) is open, as well as all of the pressure gauge's ¼" 3-way valves. Valves D, E & J (Fig. 15) should be closed.
4. **Ball drip valve G (Fig. 15)** — Make sure valve F (Fig. 15) is open. Push in on the plunger to be sure ball check is off its seat. If no water appears, the Deluge Valve's water seat is tight. Inspect the bleed hole (see Fig. 13 or Fig. 14) on the underside of the push rod chamber for leakage.
5. **Dry pilot trim** — check air gauge pressure for conformance to Table A.
6. **Wet pilot and Electric Actuation trim** — check that system air pressure is approximately 7 psi (0.5 bar). Check the pressure maintenance device for leakage and proper pressure.
7. **Releasing device** — check outlet of the releasing device (i.e., the dry pilot line actuator, solenoid valve, or the hydraulic manual emergency station) for leakage. Also verify that tubing drain lines from releasing devices are not pinched or crushed which could prevent proper releasing of the Deluge Valve.
8. **Testing alarms** — Make sure valve F (Fig. 15) is open. Open valve J (Fig. 15) permitting water from the supply to flow to the electric sprinkler alarm switch and to the mechanical sprinkler alarm (water motor). After testing, close this valve securely. Push in on the plunger of ball drip valve G (Fig. 15) until all of the water has drained from the alarm line.
9. **Operation test** — Open the Model B Manual Emergency Station, valve D (Fig. 15).
   Note: An operational test will cause the Deluge Valve to open and flow water into the sprinkler system.
10. Secure the Model B Manual Emergency Station, valve D (Fig. 15), in the OFF position with nylon tie after Deluge Valve is reset (see Fig. 12).

Testing Detection System Without Operating Deluge Valve

Refer to Figs. 7, 8 & 15.

1. Close the valve controlling water supply to Deluge Valve and open the main drain valve B (Fig. 15).
2. Verify that valve A (Fig. 15) is open, allowing water to enter the push rod chamber.
3. Operate detection system —
   A. Wet Pilot Line Single Interlock Preaction Trim—open Model B Manual Emergency Station, valve D (Fig. 15).
   B. Dry Pilot Line Single Interlock Preaction Trim—directly above the Model LP Dry Pilot Line Actuator, remove the ¼" pipe plug (#58, Fig. 7 or #58, Fig. 8) and open the ¼" three-way valve (#71, Fig. 7 or #70, Fig. 8) until the Model LP actuator operates. This will be indicated by a sudden drop in water pressure on the Deluge Valve's pushrod chamber gauge. The operation of the actuator will vent the pushrod chamber of the Deluge Valve and cause the valve's clapper to open.
   C. Electric Actuation— energize the solenoid valve by operating a detector (or detectors if cross-zoned).
4. Operation of the detection system must result in a sudden drop of water pressure in the push rod chamber.
5. Reset detection system — reverse operations performed in step three above and then proceed according to the directions listed in the "Resetting Model DDX Deluge Valve Single Interlock Preaction Systems" section of this bulletin for resetting the Deluge Valve.

Draining Excess/Condensate Water From System

Refer to Fig. 15

1. Close the main valve controlling water supply to Deluge Valve. Also close valve A and open main drain valve B.
2. Open condensate drain valve E until all water has drained. Close valve E. **Note:** Be sure not to keep valve E open for an extended period of time because that will cause enough system air to bleed off thereby causing an undesirable activation of a trouble-annunciating device.

MODEL DDX VALVE (SCREW-IN SEAT CONFIGURATION)

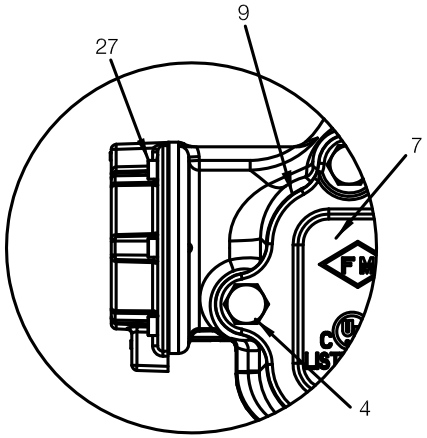

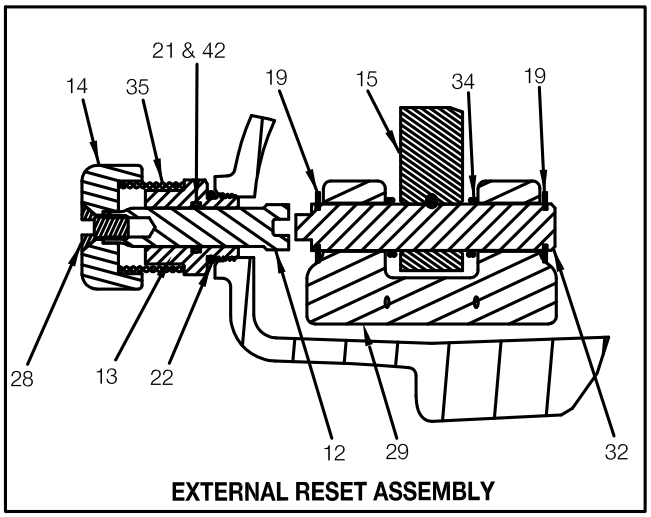

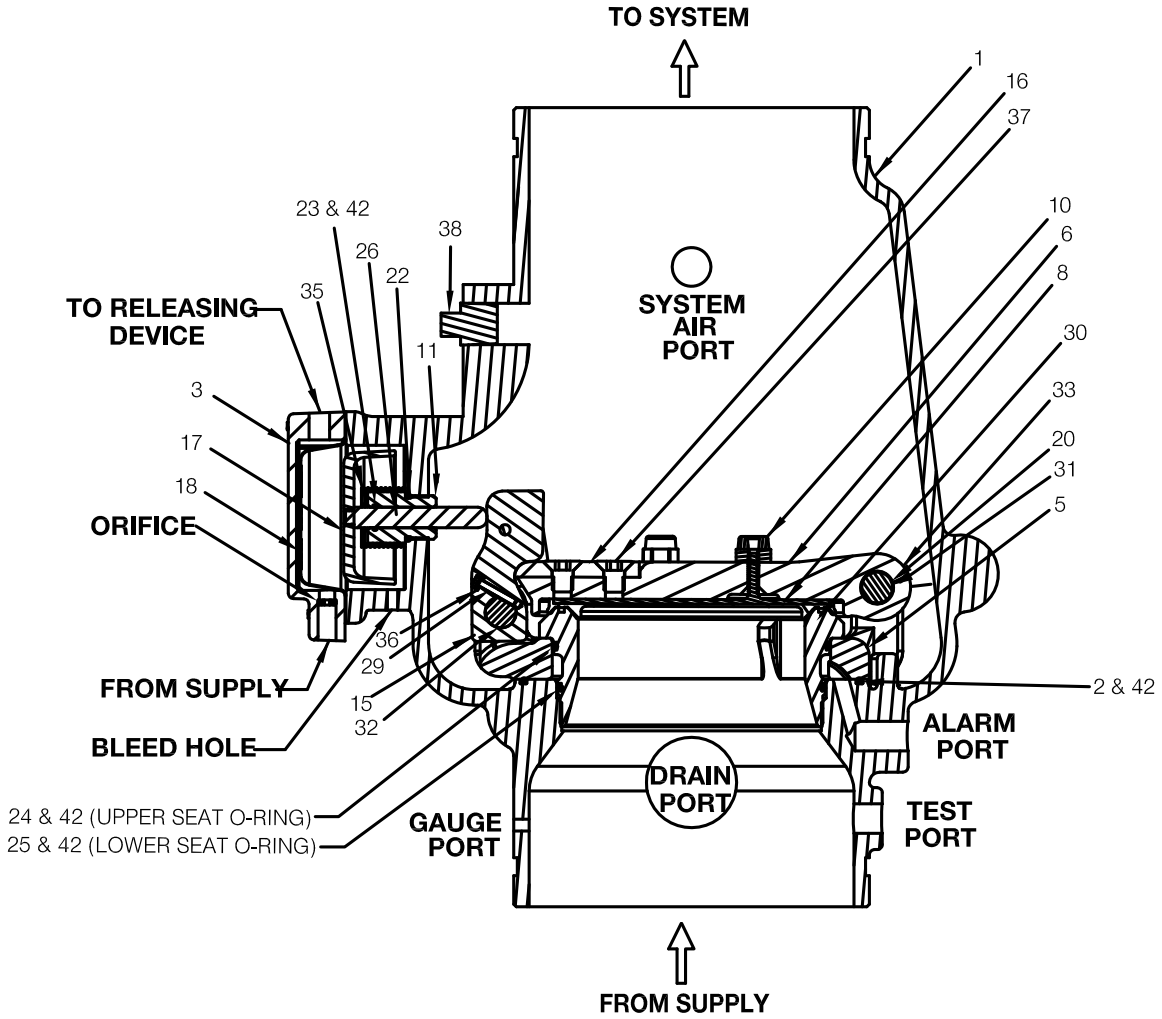

519FG12A

Fig. 13

Model DDX (Screw-In Seat Configuration) Deluge Valves Parts List (Refer to Fig. 13)

Item No.	Part No.								Part Description	QTY.	Material
	2" (50mm)	2½" (65mm)	76mm	3" (80mm)	4" (100mm)	165mm	6" (150mm)	8" (200mm)			
1	91006011	91006012	91006023	91006013	91006005	91006027	91006007	91006028	Valve Body Groove/Groove	1	Ductile Iron 65-45-12
	N/A	N/A	N/A	N/A	91006045	N/A	91006067	N/A	Valve Body Flange/Groove		
	N/A	N/A	N/A	N/A	91006035	N/A	91006037	91006039	Valve Body Flange/Flange		
2	N/A	N/A	N/A	N/A	N/A	N/A		95406414	O-ring (Mounting Ring)	1	Buna-N
3	71040416								Pushrod Cover Assembly	1	Ductile Iron 65-45-12 & Brass C360000
4	91106123				N/A	N/A		N/A	Hex Bolt ½"-13 x 1¼"	6	Zinc Plated Steel
	N/A				95606107	N/A		N/A	Hex Bolt ½"-13 x 1½"	6	
	N/A				N/A	91106006		N/A	Hex Bolt ⅝"-11 x 1¾"	6	
	N/A				N/A	N/A		95606110	Hex Bolt ⅝"-11 x 2"	8	
5	91306013				91306014	91306016		91306018	Mounting Ring	1	Stainless Steel CF8 or CF8M
6	91916003				91916014	91916016		91916008	Clapper	1	Stainless Steel CF8 or CF8M
7	92116063				92116064	92116065	92116066	92116068	Access Cover	1	Ductile Iron 65-45-12
8	93416003				93416014	93416016		93416008	Seal Assembly	1	Stainless Steel 304 & EPDM
9	93706003				93706004	93706006		93706008	Access Cover Gasket	1	Buna-N or Neoprene
10	93722000				93722000	N/A		N/A	Bumpstop Assembly	1	Stainless Steel UNS S31600 & EPDM
	N/A				N/A	93722000		N/A		2	
	N/A				N/A	N/A		93722000		3	
11	93916006								Pushrod Guide	1	Acetal
12	93916066								Reset Shaft	1	Brass UNS C36000
13	94106066								Reset Housing	1	Brass UNS C36000
14	94356006								Reset Knob	1	Aluminum 6061
15	94506003				94506004	94506016		94506008	Lever	1	Stainless Steel UNS S17400
16	95006414				94006412	95006410		95006410	Striker	1	Aluminum Bronze C95400
17	95106006								Piston	1	Stainless Steel CF8M
18	95276006								Diaphragm	1	EPDM & Polyester
19	95306267				N/A	N/A		N/A	Retaining Ring, ⅜" Shaft, Lever Pin	2	Stainless Steel 15-7 or 17-7
	N/A				95306267	N/A		N/A	Retaining Ring, ½" Shaft, Lever Pin		
	N/A				N/A	95306269		N/A	Retaining Ring, ⅝" Shaft, Lever Pin		
	N/A				N/A	N/A		95316408	Retaining Ring, ¾" Shaft, Lever Pin		
20	95306268				N/A	N/A		N/A	Retaining Ring, ⅜" Shaft, Hinge Pin	2	Stainless Steel 15-7 or 17-7
	N/A				95306267	95306267		N/A	Retaining Ring, ½" Shaft, Hinge Pin		
	N/A				N/A	N/A		95316408	Retaining Ring, ¾" Shaft, Hinge Pin		
21	95406007								O-Ring, Reset Housing ID	1	Buna-N
22	95406024								O-Ring, Reset Housing & Pushrod Guide OD	2	Buna-N
23	95406407								O-Ring, Pushrod Guide ID	1	Buna-N
24	95406410				95406409	95436126		95406413	O-Ring, Upper Seat	1	Buna-N
25	95406411				95406420	95446226		95406412	O-Ring, Lower Seat	1	Buna-N
26	95506006								Pushrod	1	Stainless Steel UNS S30300
27	95606114								Socket Head Screw, ¼"-20 x ⅝"	6	Steel
28	95606127								Flat Head Socket Cap Screw ⅜"-16 x ¾"	1	Steel
29	95606133				N/A	N/A		N/A	Socket Head Screw #6-32 x ½"	1	Stainless Steel 18-8
	N/A				95606130	95606130		95606130	Socket Head Screw #10-32 x 1"		Stainless Steel UNS S31600
30	96016003				96016014	96016016		96016008	Seat	1	Stainless Steel CF8M
31	96206003				N/A	N/A		N/A	Hinge Pin	1	Stainless Steel UNS S30400
	N/A				96216086	96216068		96206008			Stainless Steel UNS S21800
32	96216003				N/A	N/A		N/A	Lever Pin	1	Stainless Steel UNS S17400
	N/A				96216044	96216047		96216008			Stainless Steel UNS S21800
33	96310003				96906904	96906904		96310008	Clapper Spacer	2	Teflon or Acetal

Model DDX (Screw-In Seat Configuration) Deluge Valves Parts List (Refer to Fig. 13) (Continued)

Item No.	Part No.							Part Description	QTY.	Material
	2" (50mm)	2½" (65mm)	76mm	3" (80mm)	4" (100mm)	165mm	6" (150mm)	8" (200mm)			
34	96406003				N/A	N/A		N/A	Lever Spring	1	Stainless Steel UNS S30400
	N/A				96406004	96406005		96406008			Stainless Steel UNS S31600
35	96406906								Piston/ Reset Spring	2	Stainless Steel UNS S31600
36	96906112				N/A	N/A		N/A	Spring Lock Washer, #6	1	Stainless Steel 18-8
	N/A				96906111	96906111		96906111	Spring Lock Washer, #10		Stainless Steel UNS S31600
37	95606140				N/A	N/A		N/A	Flat Head Socket Cap Screw ¼"-20 x ½"	2	Stainless Steel 18-8
	N/A				95606139	N/A		N/A			Stainless Steel UNS S31600
	N/A				N/A	N/A		95606135	Flat Head Socket Cap Screw ½"-13 x ¾"		Stainless Steel UNS S31600
38	98604402								Plug, ½" NPT	1	Steel
39	94616921								Knob Caution Label (Not Shown)	1	Polystyrene
40	91556922								Ball Chain, 1/8" (Not Shown) (Length is in Inches)	6	Nickel Plated Brass
41	91556923								Clamping Link, Ball Chain (Not Shown)	1	
42	699993406								O-Ring Grease, Dupont™ Krytox® GPL-205	A/R	Krytox®

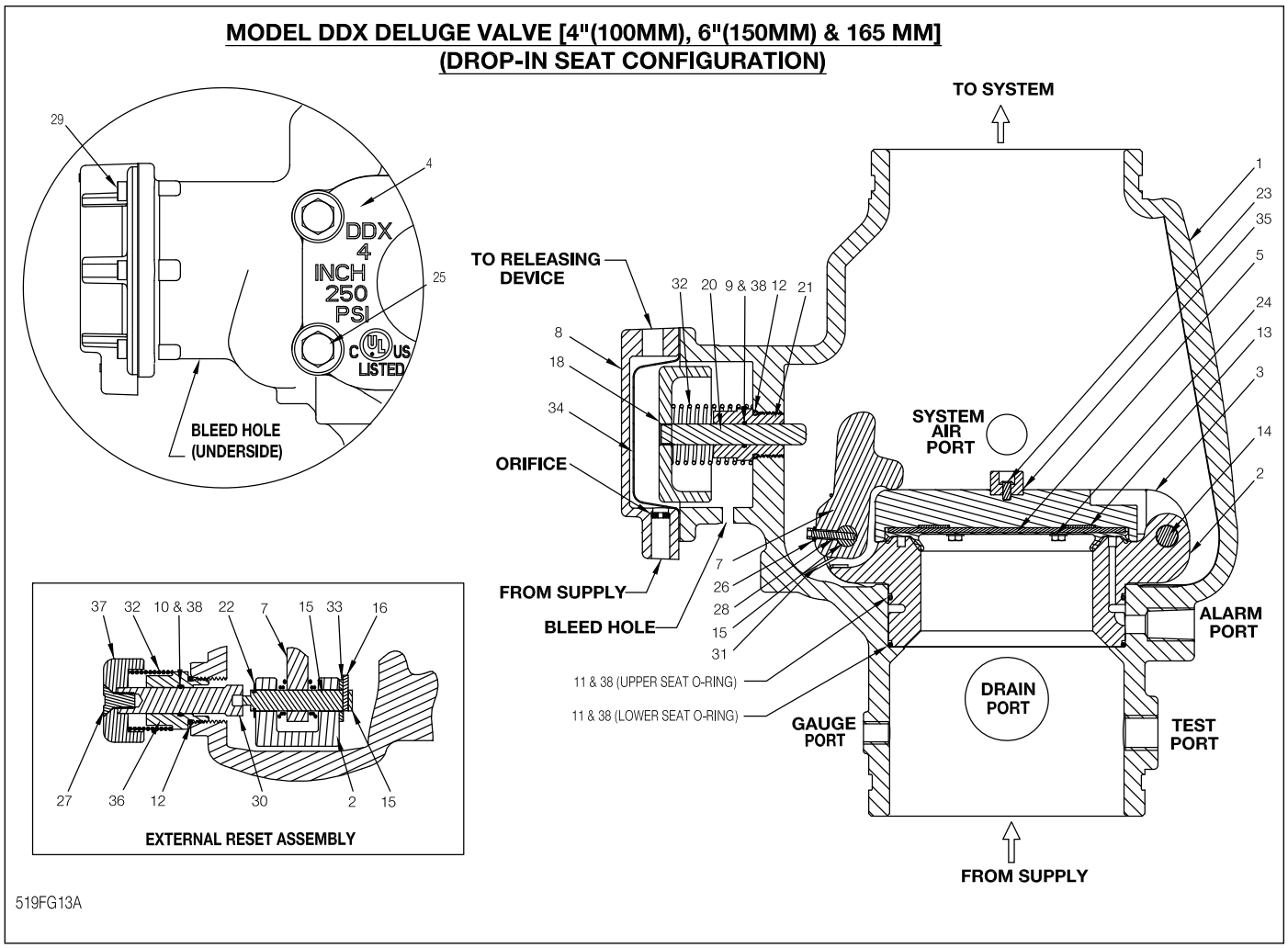

Fig. 14

Model DDX (Drop-In Seat Configuration) Deluge Valves Parts List (Refer to Fig. 14)

Item No.	Part No.			Part Description	QTY.	Material
	4" (100mm)	165mm	6" (150mm)			
1	91006005	91006027	91006007	Valve Body	1	Ductile Iron 65-45-12
2	96016004	96016006		Seat	1	Brass UNS C86300
3	91916004	91916006		Clapper	1	Brass UNS C86300
4	92116064	92116065	92116066	Access Cover	1	Ductile Iron 65-45-12
5	93416004	93416006		Seal Assembly	1	Stainless Steel 304 & EPDM
6	93706004	93706006		Access Cover Gasket	1	Buna-N or Neoprene
7	94506004	94506006		Lever	1	Stainless Steel UNS S17400
8	71040416			Pushrod Cover Assembly	1	Ductile Iron 65-45-12 & Brass UNS C36000
9	95406407			O-Ring, Pushrod Guide ID	1	Buna-N
10	95406007			O-Ring, Reset Housing ID	1	Buna-N
11	95406006	95406016		O-Ring, Upper Seat	2	Buna-N
				O-Ring, Lower Seat		Buna-N
12	95406024			O-Ring, Reset Housing OD	2	Buna-N
13	93706001	93706002		Clapper Gasket	1	Buna-N or Neoprene
14	96216086			Hinge Pin	1	Stainless Steel UNS S21800
15	96216046			Lever Pin	1	Stainless Steel UNS S44000
16	95606131			Threaded Stud, #10-32 x ¾"	1	Stainless Steel 18-8
17	96216066			Locking Pin (not shown)	2	Stainless Steel UNS S44000
18	95106006			Piston	1	Stainless Steel CF8M
19	95200038			Socket Plug ⅜" - 18 NPT (not shown)	2	Steel
20	95506006			Pushrod	1	Stainless Steel UNS S30300
21	93916006			Pushrod Guide	1	Acetal
22	95306267			Retaining Ring, 1/2" Shaft	3	Stainless Steel 15-7 or 17-7
23	95606128			Button Head Screw #10-32 x ⅜"	1	
24	95606129			Hex Washer Head Screw #10-32 x ⅜"	4	Stainless Steel 18-8
25	95606107	N/A		Hex Cap Screw ½"-13 x 1½"	6	Zinc Plated Steel
	N/A	91106006		Hex Cap Screw ⅝"-11 x 1¾"		
26	96906111			Spring Lock Washer, #10	1	Stainless Steel UNS S31600
27	95606127			Flat Head Socket Cap Screw ⅜"-16 x ¾"	1	Steel
28	95606130			Socket Head Screw #10-32 x 1"	1	Stainless Steel UNS S31600
29	95606136			Socket Head Screw, ¼"-20 x ⅝"	6	Steel
30	93916066			Reset Shaft	1	Brass UNS C36000
31	96406004			Lever Spring	1	Stainless Steel UNS S30400
32	96406906			Piston/ Reset Spring	2	Stainless Steel UNS S31600
33	96906904			Clapper Spacer	3	Teflon
34	95276006			Diaphragm	1	EPDM & Polyester
35	92306006			Bumper Disc	1	SBR Rubber
36	94106066			Reset Housing	1	Brass UNS C36000
37	94356006			Reset Knob	1	Aluminum 6061
38	6999993406			O-Ring Grease, Dupont™ Krytox® GPL-205	A/R	Krytox®
39	94616921			Knob Caution Label (Not Shown)	1	Polystyrene
40	91556922			Ball Chain, 1/8" (Not Shown) (Length is in Inches)	6	Nickel Plated Brass
41	91556923			Clamping Link, Ball Chain (Not Shown)	1	

3. Close main drain valve B. If system contains pressurized air, allow air pressure to come back up to specification. Open valve A first, and then open the main valve controlling the water supply to the Deluge Valve.

Maintenance Procedures - Model DDX Deluge Valve

Refer to Figs. 7, 8, 13, 14 & 15.

5. **Mechanical sprinkler alarm (water motor–not shown) not operating:** This is most likely caused by a clogged screen in the strainer of the water motor. Proceed as follows: Remove plug from the strainer. Remove and clean the screen. Replace the screen and the plug, and then tighten securely (Ref. Bulletin 613).
6. **Leakage out of the ball drip valve G (Fig. 15).**
   a. **Water leakage due to water column in deluge systems:**

   This condition can be caused by leakage past the system side of the Model DDX Deluge Valve's seal assembly (#8, Fig. 13 or #5, Fig. 14). Be sure that this surface is free of any type of debris. To eliminate leakage due to water column in a deluge system, refer to the section in this bulletin marked "Draining Excess/Condensate Water From System". If the problem continues proceed to the following section.

   b. **Leakage, air or water from the ball drip valve, G (Fig. 15):**

   If system air is leaking out the ball drip valve, the problem is either damage to the airside of the Model DDX Deluge Valve's seal assembly (#8, Fig. 13 or #5, Fig. 14), seat (#29, Fig. 13 or #2, Fig. 14), the upper seat o-ring (#23, Fig. 13 or #11, Fig. 14) or, on the 8" (200 mm) valve size only, the mounting ring o-ring (#2, Fig. 13). If supply water is leaking out the ball drip valve, the problem could be caused by damage to the Model DDX Deluge Valve's seal assembly (#8, Fig. 13 or #5, Fig. 14), seat (#29, Fig. 13 or #2, Fig. 14), or lower seat O-ring (#24, Fig. 13 or #11, Fig. 14). The following section provides instructions to correct both conditions:

   A) Shut down the valve controlling the water supply to the Deluge Valve and open the 1¼" main drain valve on the 2" (50mm), 2½" (65mm), 76mm and 3" (80mm) valve sizes or the 2" main drain valve on the 4" (100mm), 165mm, 6" (150mm) and 8" (200mm) valve sizes, valve B (Fig. 15). Open the water column drain valve E (Fig. 15). Close the push-rod chamber supply valve A (Fig. 15) and open the Model B Manual Emergency Station, valve D (Fig. 15).

   B) Remove the Deluge Valve's front (handhold) cover (#7, Fig. 13 or #4, Fig. 14) and inspect the seat (#29, Fig. 13 or #2, Fig. 14), clapper (#6, Fig. 13 or #3, Fig. 14), and seal assembly (#8, Fig. 13 or #5, Fig. 14) for damage. If inspection indicates damage to the seal assembly (#8, Fig. 13 or #5, Fig. 14), replace as follows:

For Valve Sizes: 2" (50mm), 2½" (65mm), 76mm, 3" (80mm), 8" (200mm) and 4" (100mm), 6" (150mm) & 165mm with Screw-In Seat only, Refer to Fig. 7, Fig. 8 & Fig. 13:

Remove the bumpstop nuts (#10, Fig. 13) and remove the seal assembly (#8, Fig. 13). Install a new seal assembly (#8, Fig. 13) and thread the bumpstop nuts (#10, Fig. 13) onto the threaded studs of the seal assembly (#8, Fig. 13) and tighten finger tight plus ¼ to ½ turn. If inspection indicates damage to the clapper (#6, Fig. 13) only, then the clapper subassembly can be removed as follows:

At the rear of the valve, disconnect the water column drain trim section starting with the elbow connector (#22, Fig. 7 or #21, Fig. 8). Then remove the ¼" globe valve (#33, Fig. 7 or #32, Fig. 8), followed by the ¾"x¼" reducing bushing (#53, Fig. 7 or #53, Fig. 8). Remove the retaining ring (condensate drain side for 2" (50mm), 2½" (65mm), 3" (80mm), 76mm and 8" (200mm) valve sizes or hand hole cover side for 4" (100mm), 6" (150mm) and 165mm valve sizes) from the clapper hinge pin (#30, Fig. 13) and push this pin through the hand hole opening for 2" (50mm), 2½" (65mm), 3" (80mm), 76mm and 8" (200mm) valve sizes or condensate drain side for 4" (100mm), 6" (150mm) and 165mm valve sizes and remove the clapper subassembly. Replace the seal assembly as described previously. Inspect the clapper (#6, Fig. 13) visually before reinstalling. Reinstall in the reverse order making sure the clapper spacers are in their proper position. If the seat (#29, Fig. 13) is damaged or it is suspected that the leakage is through the lower O-ring (#24, Fig. 13), the seat-clapper subassembly is easily removed as a unit as follows:

Using Reliable P/N 6881603000 Seat Wrench for 2" (50mm), 2½" (65mm), 76mm and 3" (80mm) valve sizes, Reliable P/N 6881604000 for 4" (100mm) valve size, Reliable P/N 6881606000 for the 6" (150mm) and 165mm valve sizes or Reliable P/N 6881608000 Seat Wrench for 8" (200mm) valve size, remove the seat by unscrewing. This will loosen the seat-clapper-mounting ring subassembly. Reach into the valve and grasp the seat and remove it from the valve. Then remove the clapper-mounting ring subassembly from the valve. Visually examine all components of the seat-clapper-mounting ring subassembly replacing any component that appears damaged. New O-rings (#23 & #24, Fig. 13 and #2, Fig. 13 (8" (200mm) valve size only))

should always be used for reassembly.

For Valve Sizes: 4" (100mm), 165mm, 6" (150mm) with Drop-In Seat Configuration only, Refer to Fig. 8 and Fig. 14:

At the rear of the valve, disconnect the water column drain trim section starting with the elbow connector (#21, Fig. 8). Then remove the ¼" globe valve (#32, Fig. 8), followed by the ¾"x¼" reducing bushing (#53, Fig. 8). Remove the retaining ring (hand hole cover side) from the clapper hinge pin (#14, Fig. 14) and push this pin through the condensate drain port and remove the clapper subassembly. Remove the four retaining screws (#24, Fig. 14) holding the seal faceplate assembly (#5, Fig. 14). Inspect the clapper (#3, Fig. 14) visually before installing. Apply a small amount of silicone based lubricant to the four retaining screws. Install a new seal faceplate assembly. Torque the retaining screws to approximately 40 inch-pounds and reassemble. If the seat (#2, Fig. 14) is damaged or it is suspected that the leakage is through the lower o-ring (#11, Fig. 14), the seat-clapper subassembly is easily removed as a unit as follows:

Using a 5/16" Allen wrench, remove the two 3/8" NPT pipe plugs (#19, (not shown) Fig. 14) located on the side chamber side of the Model DDX deluge valve. The seat-clapper subassembly is retained by two locking pins (#17, (not shown) Fig. 14). The centers of these pins have a ¼"-20 threaded hole. Remove the two locking pins by engaging them with a ¼"-20 screw and pulling them out (the two locking pins are not externally threaded, so turning them with the attached ¼"-20 screw or threaded rod is not recommended. A proven method is to use ¼"-20 threaded rod with a locknut on the unassembled end. Grab hold of the locknut with a pliers or vise-grips and tap the pliers or vise-grips in the direction away from the Deluge Valve. Doing so should pull the locking pins out of the Deluge Valve. With the clapper (#3, Fig. 14) in the closed position (not latched), dislodge the clapper-seat subassembly from the valve body by inserting two slotted screwdrivers under the lever and clapper mounting ears and pry up until the clapper-seat subassembly is free from its bore. Reach into the valve and grasp the clapper-seat subassembly from the sides. Making sure the clapper is in the closed position (see Fig. 1), lift up and rotate the clapper-seat sub assembly clockwise 90 degrees so that the lever side of the assembly is facing up towards the outlet of the deluge valve. Next, rotate the clapper-seat sub assembly 90 degrees about the centerline of the valve so that the clapper is facing the hand hole opening and the lever is still facing the outlet of the deluge valve. Then rotate the clapper-seat sub assembly 90 degrees, so that the clapper is now facing the outlet of the deluge valve and the lever is now facing the back of the valve. Pull the clapper-seat sub assembly out through the hand hole opening by the hinge pin side. Rotating the seat-clapper subassembly up as it is being removed will help it slide out more easily since the lever will prohibit it from sliding straight out. Visually examine all components of the clapper-seat subassembly replacing any component that appears damaged. New o-rings (#11, Fig. 14) should always be used for reassembly.

Reassembly:

For Valve Sizes: 2" (50mm), 2½" (65mm), 76mm, 3" (80mm), 8" (200mm) and 4" (100mm), 6" (150mm) & 165mm with Screw-In Seat Configuration only, Refer to Fig. 13:

Clean the bore of the valve body. Lubricate the bore with O-ring grease. Lubricate and install the O-rings (#23 & #24, Fig. 13) onto the seat. Lubricate and install the mounting ring o-ring (#2, Fig. 13) into the body (8" (200mm) valve size only). Insert the clapper-mounting ring subassembly into the handhold opening of the Deluge Valve using caution to not damage or dislodge the mounting ring o-ring (#2, Fig. 13)(8" (200mm) valve size only). Align the mounting ring so that the Lever (#15, Fig. 13) is near the pushrod (#25, Fig. 13) and the mounting ring (#5, Fig. 13) "ears" are between the tabs of the valve body (#1, Fig. 13). Insert the seat (#29, Fig. 13) into the valve body (#1, Fig. 13) and through the clapper-mounting ring subassembly. Start to tread the seat (#29, Fig. 13) into the body by hand, then tighten the seat (#29, Fig. 12) with Reliable P/N 6881603000 Seat Wrench for 2" (50mm), 2½" (65mm), 76mm and 3" (80mm) valve sizes, Reliable P/N 6881604000 Seat Wrench for 4" (100mm) valve size, Reliable P/N 688106000 Seat Wrench for 6" (150mm and 165mm valve sizes or Reliable P/N 6881608000 Seat Wrench for 8" (200mm) valve size until it bottoms out on the mounting ring (#5, Fig. 13). Verify that the seat-clapper-mounting ring subassembly is in the fully down position between the tabs of the body, and check to see that the lever (#15, Fig. 13) lines up with the push rod (#25, Fig. 13). Loosen and reassemble if necessary. Reassemble the handhold cover (#7, Fig. 13) and set up the Model DDX Deluge Valve as per the section "Resetting Model DDX Deluge Valve Single Interlock Preaction Systems".

For Valve Sizes: 4" (100mm), 165mm, 6" (150mm) with Drop-In Seat Configuration only, Refer to Fig. 14:

It is likely that the lower seat o-ring (#11, Fig. 14) has remained at the bottom of the Deluge Valve body's bore. Discard this o-ring and clean the bore. Lubricate the bore with o-ring grease and place the lower o-ring on the step at the bottom of the bore, verifying that it is in full contact with

the bore. Lubricate the bottom step and upper o-ring (#11, Fig. 14) of the refurbished clapper-seat subassembly. Insert the clapper-seat sub assembly into the hand hole opening, lever (#7, Fig. 14) first and rotating the clapper-seat subassembly until the lever faces the outlet of the deluge valve. Next rotate the clapper-seat subassembly 90 degrees about the center axis of the valve until the bottom of the clapper-seat sub assembly faces the pushrod (#20, Fig. 14). Then rotate the clapper-seat subassembly 90 degrees counter-clockwise so that the clapper (#3, Fig. 14) is facing the outlet of the deluge valve and the lever (#7, Fig. 14) is facing the pushrod (#20, Fig. 14). Once the clapper seat subassembly is in this position simply slide the assembly into the bore of the valve, making sure it is straight to avoid binding of the seat in the bore. Slightly twisting the assembly will assist in getting the clapper-seat subassembly properly seated. Once it is verified that the clapper-seat sub assembly is in the fully down position and the lever (#7, Fig. 14) is aligned with the pushrod (#20, Fig. 14), clean and lubricate the two locking pins (#17, (not shown) Fig. 14) with o-ring lubricant. Slide the two locking pins into the deluge valve body to lock the seat in place. Slightly twisting and pressing down on the clapper-seat subassembly will help the pins to slide in more easily. Then re-install the 3/8" NPT pipe plugs (#19, (not shown) Fig. 14). Reassemble the hand hole cover (#4, Fig. 14) and set up the Model DDX Deluge Valve as per the section "Resetting Model DDX Deluge Valve Single Interlock Preaction Systems".

7. **Leakage out of the push rod chamber vent hole:**
   A small bleed hole is located on the underside of the push rod chamber (see Fig. 13 or Fig. 14). If there is air or water leakage coming out of this hole, do the following:
   a) Shut down the valve controlling water supply to the Deluge Valve. Relieve the inlet pressure by opening the 1¼" main drain valve on the 2" (50mm), 2½" (65mm), 76mm and 3" (80mm) valve sizes or the 2" main drain valve on the 4" (100mm), 165mm, 6" (150mm) and 8" (200mm) valve sizes, valve B (Fig. 15). Close the valve A (Fig. 15) that supplies water to the push rod chamber, and open the Model B Manual Emergency Station, valve D (Fig. 15).
   b) Remove the trim at the unions nearest to the push rod chamber cover (#3, Fig. 13 or #8 Fig. 14).
   c) Take the push rod chamber cover (#3, Fig. 13 or #8, Fig. 14) off by removing the six retaining screws (#26, Fig. 13 or #29, Fig. 14).

   CONDITION ONE (Water coming out of the bleed hole):
   Water coming out of the bleed hole is caused by a leaking diaphragm (#18, Fig. 13 or #34, Fig. 14). Visually inspect the push rod chamber cover (#3, Fig. 13 or #8, Fig. 14) and piston (#17, Fig. 13 or #18, Fig. 14) to determine what could have damaged the diaphragm and correct. Install a new diaphragm. **NOTE:** The diaphragm has two different surfaces; it is not bi-directional. It will fail if installed backwards! Roll the diaphragm so that the smooth surface (the pressure side) conforms to the inside of the push rod chamber cover and reassemble the six retaining screws (#26, Fig. 13 or #29, Fig. 14) with an installation torque of 15 foot-pounds. Set up the Model DDX Deluge Valve as per the section "Resetting Model DDX Deluge Valve Single Interlock Preaction Systems".

   CONDITION TWO (System Air coming out of the bleed hole):
   System air coming out of the bleed hole is caused by a defective O-ring assembled to the push rod guide (#11, Fig. 13 or #9, Fig. 14). Remove the piston-push rod subassembly, push rod spring (#34, Fig. 13 or #32, Fig. 14), and push rod guide (#11, Fig. 13 or #21, Fig. 14). Verify by hand turning, that the push rod cannot be unscrewed from the piston. Replace all O-rings and the push rod guide (#21, #22 & #11, Fig. 13 or #9, #12 & #21, Fig. 14). The correct installation torque for the pushrod guide is 35 inch-pounds. **CAUTION:** Do not over tighten the push rod guide. Reassemble the components that were initially removed. Re-install the diaphragm (#18, Fig. 13 or #34, Fig. 14) if it appears to be in good shape, otherwise, replace it also. **NOTE:** The diaphragm has two different surfaces; it is not bi-directional. It will fail if installed backwards! Roll the diaphragm so that the smooth surface (the pressure side) conforms to the inside of the push rod chamber cover and reassemble the six retaining screws (#26, Fig. 13 or #29, Fig. 14) with an installation torque of 15 foot-pounds. Set up the Model DDX Deluge Valve as per the section "Resetting Model DDX Deluge Valve Single Interlock Preaction Systems".

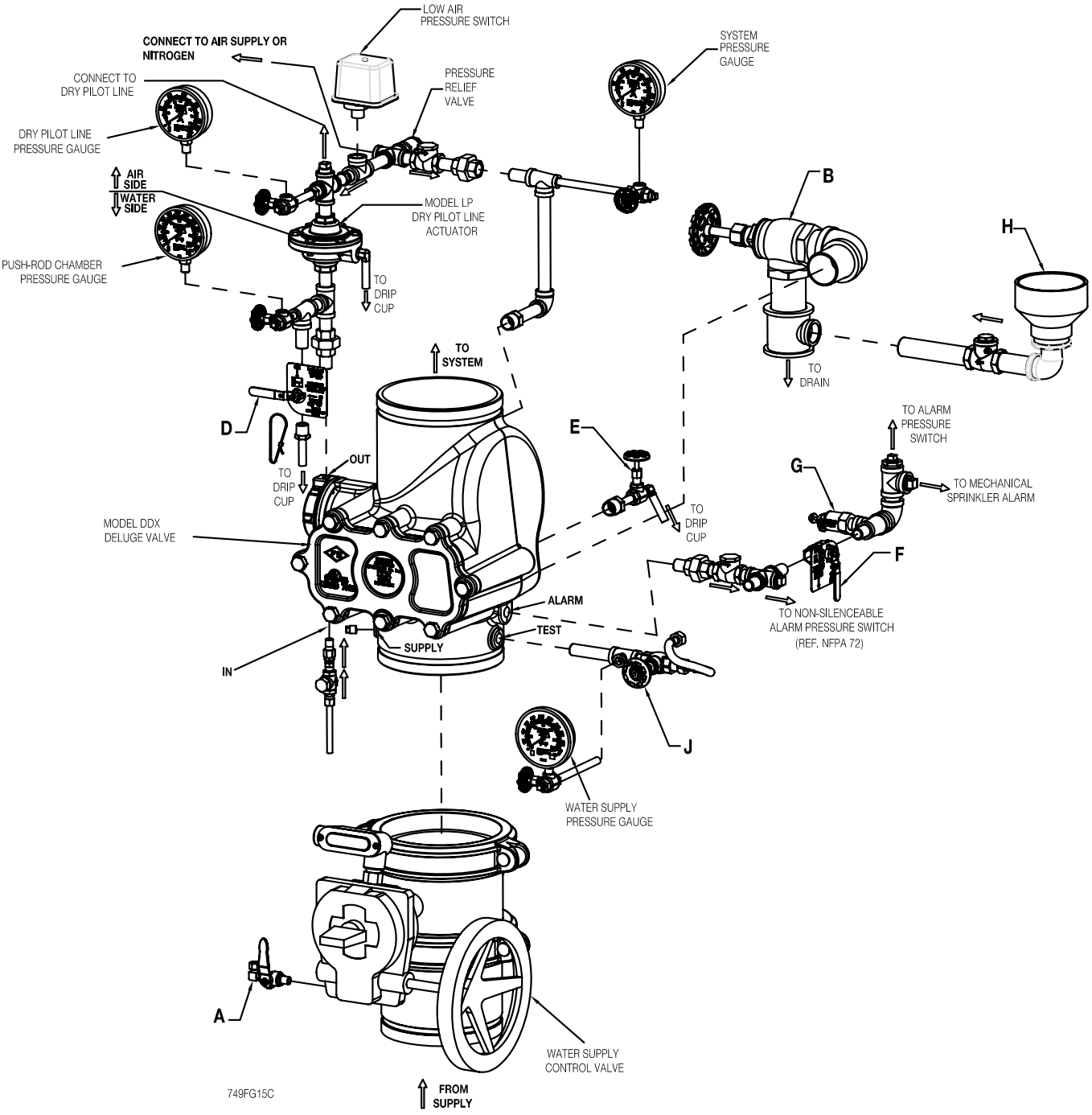
LOW AIR PRESSURE SWITCH
CONNECT TO AIR SUPPLY OR NITROGEN
CONNECT TO DRY PILOT LINE
PRESSURE RELIEF VALVE
SYSTEM PRESSURE GAUGE
DRY PILOT LINE PRESSURE GAUGE
AIR SIDE
WATER SIDE
MODEL LP DRY PILOT LINE ACTUATOR
PUSH-ROD CHAMBER PRESSURE GAUGE
TO DRIP CUP
B
H
TO DRAIN
TO SYSTEM
D
E
TO ALARM PRESSURE SWITCH
G
TO MECHANICAL SPRINKLER ALARM
OUT
TO DRIP CUP
TO DRIP CUP
MODEL DDX DELUGE VALVE
F
ALARM
TEST
SUPPLY
IN
TO NON-SILENCEABLE ALARM PRESSURE SWITCH (REF. NFPA 72)
J
WATER SUPPLY PRESSURE GAUGE
A
WATER SUPPLY CONTROL VALVE
749FG15C
FROM SUPPLY

Fig. 15

ELECTRIC ACTUATUON SINGLE INTERLOCK PREACTION SYSTEM COMPONENTS

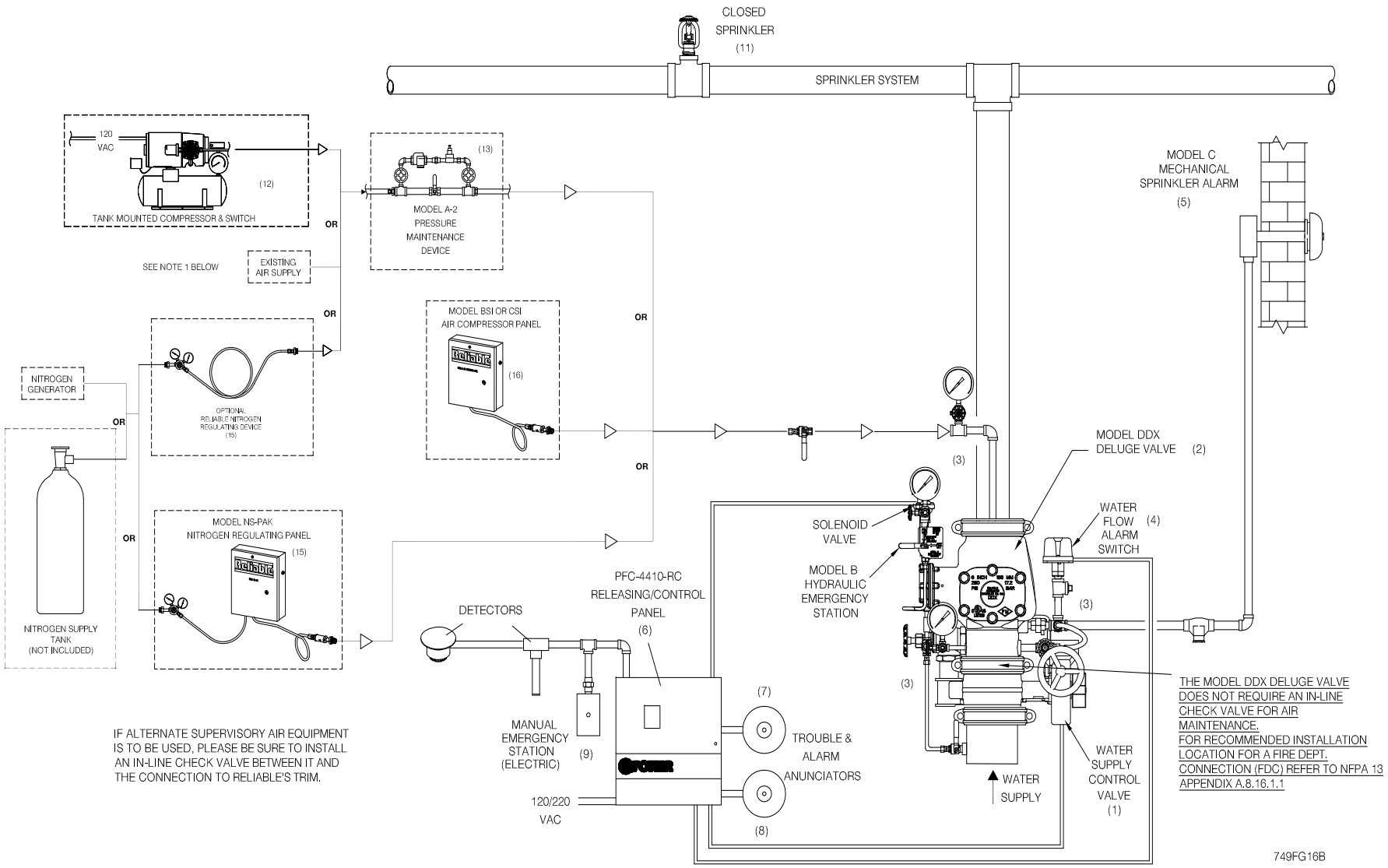

NOTE 1: THIS DRAWING DEPICTS THE RECOMMENDED PNEUMATIC SUPPLY SYSTEMS THAT WILL OPTIMIZE SYSTEM PERFORMANCE, BUT IS NOT INTENDED TO PROHIBIT ANY SUPPLY ARRANGEMENT(S) CURRENTLY MEETING THE REQUIREMENTS OF NFPA 13.

Fig. 16

DRY PILOT LINE SINGLE INTERLOCK PREACTION SYSTEM COMPONENTS

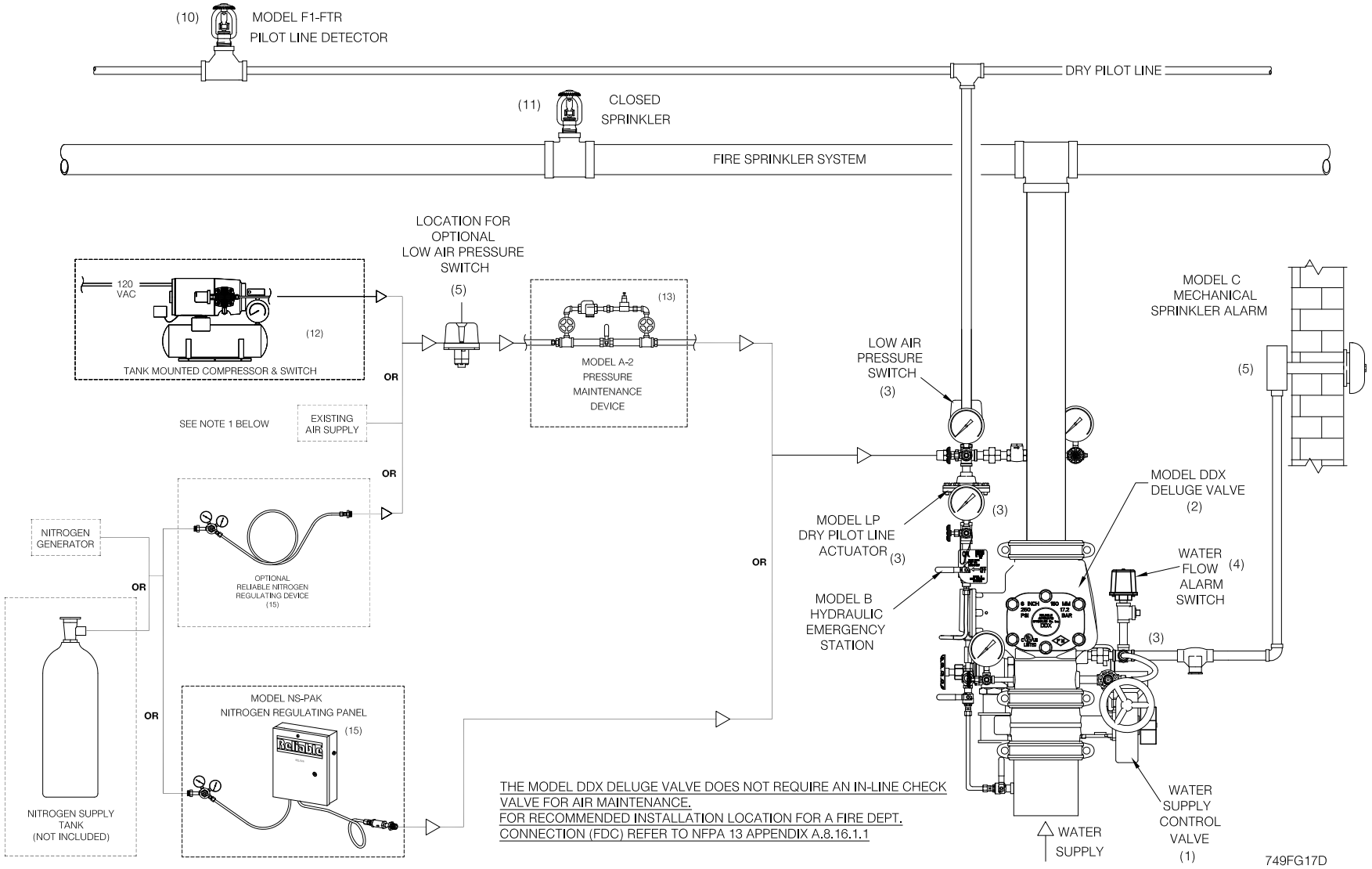

NOTE 1: THIS DRAWING DEPICTS THE RECOMMENDED PNEUMATIC SUPPLY SYSTEMS THAT WILL OPTIMIZE SYSTEM PERFORMANCE, BUT IS NOT INTENDED TO PROHIBIT ANY SUPPLY ARRANGEMENT(S) CURRENTLY MEETING THE REQUIREMENTS OF NFPA 13.

Fig. 17

Ordering Information

Specify:

- **Valve Model & Size** —

Valve Part Numbers			
Valve Size & End Connection	**Flange Type**	**Color**	**Reliable Part Number**
2" (50mm) Grv/Grv	N/A	Black	6103022000
		Red	6103022001
2½" (65mm) Grv/Grv	N/A	Black	6103022500
		Red	6103022501
3" (80mm) Grv/Grv	N/A	Black	6103030000
		Red	6103030001
76mm Grv/Grv	N/A	Red	6103027600
4" (100mm) Grv/Grv	N/A	Black	6103040026
		Red	6103040030
4" (100mm) Flg/Grv	ASME Class 150	Black	6103040044
	ASME Class 150	Red	6103040046
	ISO PN16	Red	6103040048
4" (100mm) Flg/Flg	ASME Class 150	Black	6103040045
	ASME Class 150	Red	6103040047
	ISO PN16	Red	6103040049
6" (168mm) Grv/Grv	N/A	Black	6103060024
		Red	6103060030
6" (168mm) Flg/Grv	ASME Class 150	Black	6103060045
	ASME Class 150	Red	6103060048
	ISO PN16	Red	6103060049
6" (168mm) Flg/Flg	ASME Class 150	Black	6103060046
	ASME Class 150	Red	6103060047
	ISO PN16	Red	6103060050
165mm Grv/Grv	N/A	Red	6103060028
165mm Flg/Grv	ASME Class 150	Red	6103060051
	ISO PN16	Red	6103060052
8" (200mm) Grv/Grv	N/A	Black	6103080001
		Red	6103080003
8" (200mm) Flg/Flg	ASME Class 150	Black	6103080016
	ASME Class 150	Red	6103080018
	ISO PN16	Red	6103080020

- **Trim** — Wet Pilot Line Single Interlock Preaction Trim, Dry Pilot Line Single Interlock Preaction Trim, or Electric Actuation Single Interlock Preaction Trim. Each trim set is available in individual parts, in time-saving, segmentally assembled kit forms, or fully assembled to the Model DDX Deluge Valve with or without a control valve). The Electric Actuation trim is available with a 175 psi (12.1 bar) or 300 psi (20.7 bar) rated solenoid valve.

Wet Pilot Line Single Interlock Preaction Systems

Trim Part Numbers						
Valve Size & End Connection	Trim Configurations					
	Flange Type	Color	Individual Parts (Model DDX Valve Sold Seperately)	Segmentally Assembled (Model DDX Valve Sold Seperately)	Fully Assembled to Model DDX Valve w/o Control Valve	Fully Assembled to Model DDX Valve w/ Control Valve
2" (50mm) Grv/Grv	N/A	Black	6503002752	6503002753	6505020076	6505020075
		Red			6505A20076	6505A20075
2½" (65mm) Grv/Grv	N/A	Black			6505022576	6505022575
		Red			6505A22576	6505A22575
3" (80mm) Grv/Grv	N/A	Black			6505030076	6505030075
		Red			6505A30076	6505A30075
76mm Grv/Grv	N/A	Red			6505A27676	N/A
4" (100mm) Grv/Grv	N/A	Black	6503001710	6503001711	6505040275	6505040276
		Red			6505A40275	6505A40276
4" (100mm) Flg/Grv	ASME Class 150	Black			6505043275	N/A
	ASME Class 150	Red			6505A43275	
	ISO PN16	Red			6505A44275	
4" (100mm) Flg/Flg	ASME Class 150	Black			6505047275	N/A
	ASME Class 150	Red			6505A47275	
	ISO PN16	Red			6505A48275	
6" (168mm) Grv/Grv	N/A	Black			6505060275	6505060276
		Red			6505A60275	6505A60276
6" (168mm) Flg/Grv	ASME Class 150	Black			6505063275	N/A
	ASME Class 150	Red			6505A63275	
	ISO PN16	Red			6505A64275	
6" (168mm) Flg/Flg	ASME Class 150	Black			6505067275	N/A
	ASME Class 150	Red			6505A67275	
	ISO PN16	Red			6505A68275	
165mm Grv/Grv	N/A	Red			6505A65274	N/A
165mm Flg/Grv	ASME Class 150	Red			6505A66275	N/A
	ISO PN16	Red			6505A69275	
8" (200mm) Grv/Grv	N/A	Black			6505080275	6505080276
		Red			6505A80275	6505A80276
8" (200mm) Flg/Flg	ASME Class 150	Black			6505087275	N/A
	ASME Class 150	Red			6505A87275	
	ISO PN16	Red			6505A88275	

Electric Actuation Deluge (Explosion Proof Solenoid Available Upon Request)

	Trim Part Numbers					
	Trim Configurations					
Valve Size & End Connection	Flange Type	Color	Individual Parts (Model DDX Valve Sold Separately)	Segmentally Assembled (Model DDX Valve Sold Separately)	Fully Assembled to Model DDX Valve w/o Control Valve	Fully Assembled to Model DDX Valve w/ Control Valve
2" (50mm) Grv/Grv	N/A	Black	6503002222	6503002223	6505020031	6505020030
		Red			6505A20031	6505A20030
2½" (65mm) Grv/Grv	N/A	Black			6505022531	6505022530
		Red			6505A22531	6505A22530
3" (80mm) Grv/Grv	N/A	Black			6505030031	6505030030
		Red			6505A30031	6505A30030
76mm Grv/Grv	N/A	Red			6505A27631	N/A
4" (100mm) Grv/Grv	N/A	Black	6503001706	6503001707	6505040231	6505040230
		Red			6505A40231	6505A40230
4" (100mm) Flg/Grv	ASME Class 150	Black			6505043231	N/A
	ASME Class 150	Red			6505A43231	
	ISO PN16	Red			6505A44231	
4" (100mm) Flg/Flg	ASME Class 150	Black			6505047231	N/A
	ASME Class 150	Red			6505A47231	
	ISO PN16	Red			6505A48231	
6" (168mm) Grv/Grv	N/A	Black			6505060231	6505060230
		Red			6505A60231	6505A60230
6" (168mm) Flg/Grv	ASME Class 150	Black			6505063231	N/A
	ASME Class 150	Red			6505A63231	
	ISO PN16	Red			6505A64231	
6" (168mm) Flg/Flg	ASME Class 150	Black			6505067231	N/A
	ASME Class 150	Red			6505A67231	
	ISO PN16	Red			6505A68231	
165mm Grv/Grv	N/A	Red			6505A65231	N/A
165mm Flg/Grv	ASME Class 150	Red			6505A66231	N/A
	ISO PN16	Red			6505A69231	
8" (200mm) Grv/Grv	N/A	Black			6505080231	6505080230
		Red			6505A80231	6505A80230
8" (200mm) Flg/Flg	ASME Class 150	Black			6505087231	N/A
	ASME Class 150	Red			6505A87231	
	ISO PN16	Red			6505A88231	
2" (50mm) Grv/Grv	N/A	Black	6503002226	6503002227	6505020041	6505020040
		Red			6505A20041	6505A20040
2½" (65mm) Grv/Grv	N/A	Black			6505022541	6505022540
		Red			6505A22541	6505A22540
3" (80mm) Grv/Grv	N/A	Black			6505030041	6505030040
		Red			6505A30041	6505A30040
76mm Grv/Grv	N/A	Red			6505A27641	N/A
4" (100mm) Grv/Grv	N/A	Black	6503001708	6503001709	6505040241	6505040240
		Red			6505A40241	6505A40240
4" (100mm) Flg/Grv	ASME Class 150	Black			6505043241	N/A
	ASME Class 150	Red			6505A43241	
	ISO PN16	Red			6505A44241	
4" (100mm) Flg/Flg	ASME Class 150	Black			6505047241	N/A
	ASME Class 150	Red			6505A47241	
	ISO PN16	Red			6505A48241	
6" (168mm) Grv/Grv	N/A	Black			6505060241	6505060240
		Red			6505A60241	6505A60240
6" (168mm) Flg/Grv	ASME Class 150	Black			6505063241	N/A
	ASME Class 150	Red			6505A63241	
	ISO PN16	Red			6505A64241	
6" (168mm) Flg/Flg	ASME Class 150	Black			6505067241	N/A
	ASME Class 150	Red			6505A67241	
	ISO PN16	Red			6505A68241	
165mm Grv/Grv	N/A	Red			6505A65241	N/A
165mm Flg/Grv	ASME Class 150	Red			6505A66241	N/A
	ISO PN16	Red			6505A69241	
8" (200mm) Grv/Grv	N/A	Black			6505080241	6505080240
		Red			6505A80241	6505A80240
8" (200mm) Flg/Flg	ASME Class 150	Black			6505087241	N/A
	ASME Class 150	Red			6505A87241	
	ISO PN16	Red			6505A88241	

175 psi (12.1 bar) Rated Solenoid Valve

300 psi (20.7 bar) Rated Solenoid Valve

- Additional equipment—(Refer to Fig. 16 & Fig. 17).

Item No.	Component Part	Mfgr.	Description	Technical Bulletin
1	Water Supply Control Valve	Select	OS&Y	-
			Butterfly	-
	Tamper Switch (Optional) for OS&Y Valve	C	Model OS&Y2	Potter 5400928
	(Optional) for Butterfly Valve		Model P1BV2	Potter 5400928
2	Deluge Valve	B	Model DDX	Reliable 518/519
3	Single Interlock Preaction Trim Kit	B	Refer to Parts List in this Bulletin	Reliable 749
4	Waterflow Alarm Pressure Switch	C	Model PS10-2 (DPDT, cULus, FM, Lpc)	Potter 5400928
5	Mechanical Alarm (Optional)	B	Model C	Reliable 612 / 613
6	Releasing / Control Panel	C	Model PFC-4410-RC	Potter #5403550
	Batteries		12 VDC, 12 AMP Hours (90 Hours Backup) FM	
			12 VDC, 7 AMP Hours (60 Hours Backup)	
	Optional Accessories		CA2Z (Class A Wiring Module for Initiating Circuits)	
			CAM (Class A Wiring Module for Indicating Circuits)	
			ARM-1 / ARM-2 (Auxiliary Relay Module)	
			RA-4410-RC (Remote Annunciator)	
7	Alarm Annunciator	A	Model SSM24-8 24 VDC / Polarized Bell	-
			Model SSM24-10 24 VDC / Polarized Bell	
			Model MA24-D 24 VDC / Polarized Sounder	
			Model MASS24LO 24 VDC / Polarized Sounder Strobe	
8	Trouble Annunciator	A	Model SSM24-6 24 VDC / Polarized Bell	-
			Model MA24-D 24 VDC / Polarized Sounder	
9	Manual Emergency Station (Elec.)	A	Model BNG-1 (SPDT) 1 & 2 Area Detection	-
			Model BNG-1F (DPDT) Cross Zoned Detection	
10	Pilot Line Detectors	B	Model F1-FTR Pilot Line Detectors	Reliable 180
11	Sprinklers	B	Closed Type	Reliable 110, 117, 131, 136, etc.
12	Air Compressor	E	Per NFPA 13 requirements	Gast F-30
13	Pressure Maintenance Device	B	Model A-2 or B-1	Reliable 254
14	-	-	Model B1	Reliable 323
15	Nitrogen Regulating Device	B	-	-
16	Air Compressor Panel	B	Model B-SI or C-SI Air Compressor Panel	Reliable 254

System Equipment Manufacturers

(A) Notifier
(B) Reliable Automatic Sprinkler Co., Inc.
(C) Potter Electric Signal Company
(D) ---
(E) Gast Mfg, Inc.

Nominal Pipe Size	Installation Dimensions in Inches (mm)																	
	A	B	C	D*	D**	D***	D****	E	F	G	H	J	K	L	M	N	P	Q
2" (50 mm)	8 (203)	7 (178)	9½ (241)	12½ (318)	21¼ (540)	N/A	N/A	19 (283)	26¾ (679)	6 (152)	5¼ (133)	4¼ (108)	5½ (140)	11 (279)	3 (76)	4½ (114)	9 (229)	9¼ (235)
2½" (65 mm), 3" (80 mm) & 76 mm	8 (203)	7 (178)	9½ (241)	12½ (318)	22 (559)	N/A	N/A	19 (283)	26¾ (679)	6 (152)	5¼ (133)	4¼ (108)	5½ (140)	11 (279)	3 (76)	4½ (114)	9 (229)	9¼ (235)
4" (100 mm)	8½ (215)	8 (203)	10½ (267)	14 (356)	24¼ (616)	16 (406)	16 (406)	19¾ (502)	24¾ (629)	7½ (191)	1¼ (32)	5½ (140)	7½ (191)	13½ (343)	5 (127)	6¾ (171)	8 (203)	11¾ (298)
6" (150 mm) & 165 mm	8½ (215)	9 (229)	11½ (292)	16 (406)	27½ (699)	19 (483)	19 (483)	21½ (546)	26½ (673)	8 (203)	1¼ (32)	5½ (140)	8½ (215)	13¾ (349)	4¾ (121)	6½ (165)	8¾ (222)	12 (305)
8" (200 mm)	8½ (215)	9¾ (248)	12¼ (311)	19⅜ (492)	30¼ (768)	N/A	21¼ (540)	28¼ (718)	33¼ (845)	9 (229)	1¼ (32)	5½ (140)	9½ (241)	14½ (368)	3½ (89)	5¼ (133)	8½ (216)	12¾ (324)

D* is total takeout for Fully Assembled to Grv/Grv DDX Valve w/o Control Valve Configurations
D** is total takeout for Fully Assembled to Grv/Grv DDX Valve w/ Control Valve Configurations
D*** is total takeout for Fully Assembled to Flg/Grv DDX Valve w/o Control
D**** is total takeout for Fully Assembled to Flg/Flg DDX Valve w/o Control Valve Configurations

TRIM SHOWN FULLY ASSEMBLED WITHOUT CONTROL VALVE

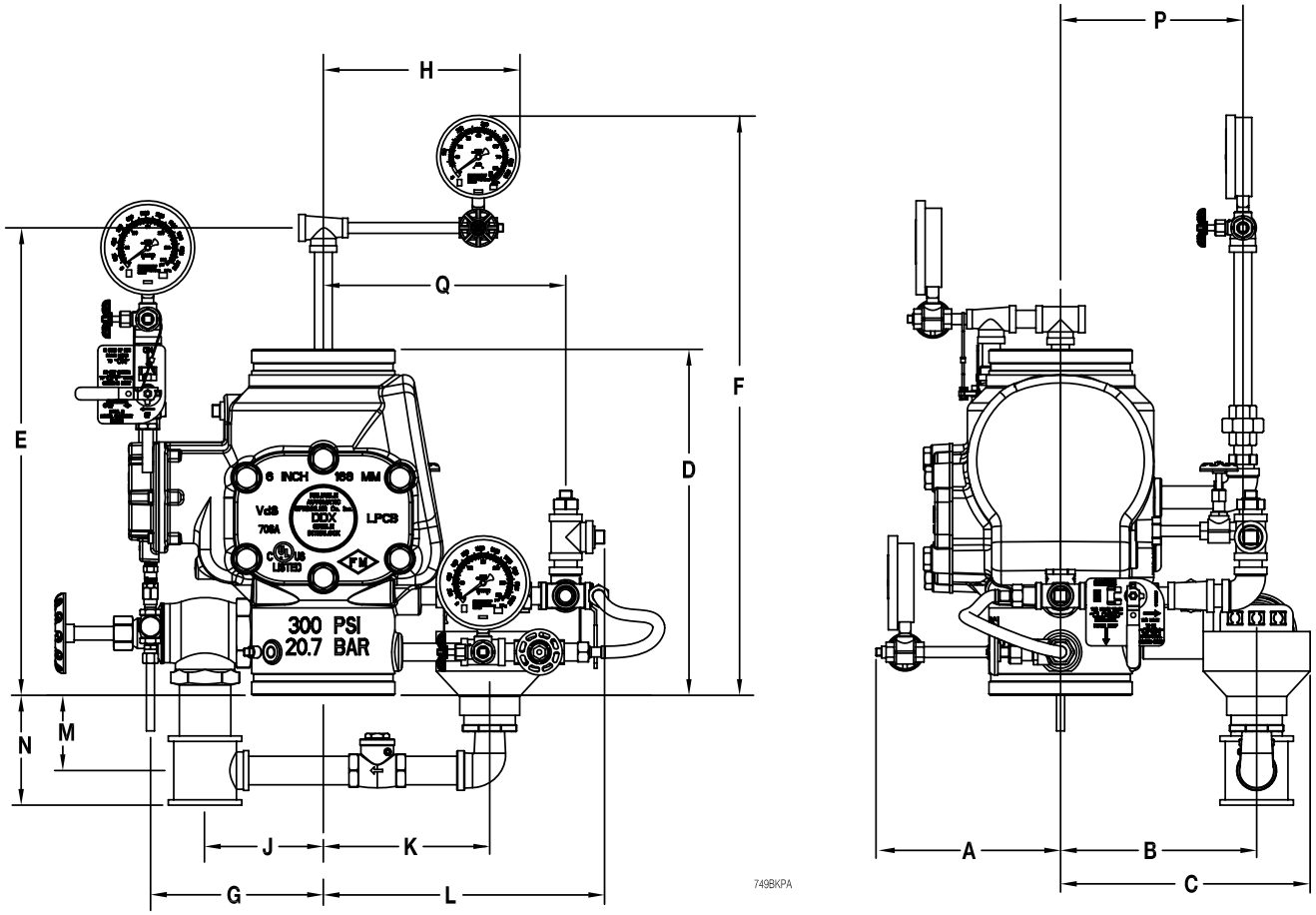

SOLENOID VALVE INSPECTIONS, TESTS AND MAINTENANCE

WARNING: THE OWNER IS RESPONSIBLE FOR MAINTAINING THE FIRE PROTECTION SYSTEM IN PROPER OPERATING CONDITION. ANY SYSTEM MAINTENANCE OR TESTING THAT INVOLVES PLACING A CONTROL VALVE OR DETECTION SYSTEM OUT OF SERVICE MAY ELIMINATE THE FIRE PROTECTION OF THAT SYSTEM. PRIOR TO PROCEEDING, NOTIFY ALL AUTHORITIES HAVING JURISDICTION. CONSIDERATION SHOULD BE GIVEN TO EMPLOYMENT OF A FIRE PATROL IN THE AFFECTED AREA.

WARNING: PRIOR TO OPERATING THE SOLENOID VALVE, BE SURE TO CLOSE THE SYSTEM CONTROL VALVE TO AVOID UNINTENTIONAL OPERATION OF THE DELUGE VALVE

1. Inspections: It is imperative that the system be inspected and tested in accordance with NFPA 25 on a regular basis. The frequency of the inspections may vary due to contaminated water supplies, corrosive water supplies, or corrosive atmospheres. In addition, the alarm devices, detection systems, or other connected trim may require a more frequent schedule. Refer to the system description and applicable codes for minimum requirements.
2. The valve must be inspected at least monthly for cracks, corrosion, leakage, etc., cleaned and replaced as necessary.
3. If leakage is suspected through the solenoid valve, it should be replaced.

The equipment presented in this bulletin is to be installed in accordance with the latest published Standards of the National Fire Protection Association, Factory Mutual Research Corporation, or other similar organizations and also with the provisions of governmental codes or ordinances whenever applicable.

Products manufactured and distributed by Reliable have been protecting life and property for almost 100 years.

Manufactured by

Reliable®

Reliable Automatic Sprinkler Co., Inc.
(800) 431-1588 Sales Offices
(800) 848-6051 Sales Fax
(914) 829-2042 Corporate Offices
www.reliablesprinkler.com Internet Address

Recycled Paper

Revision lines indicate updated or new data.

EG. Printed in U.S.A. 02/18 P/N 9999970440